MODEL : RH - 101
MATERIAL : S.S. 304

MODEL : PH - 201
MATERIAL : S.S. 304

FINISH : S.S. 304 MATT - GLOSSY - TWO TONE - BLACK - WENGI

MODEL : RH - 102
MATERIAL : S.S. 304

MODEL : PH - 202
MATERIAL : S.S. 304

FINISH : S.S. 304 MATT - GLOSSY - TWO TONE - BLACK - WENGI

MODEL : RH - 103
MATERIAL : S.S. 304

MODEL : PH - 203
MATERIAL : S.S. 304

FINISH : S.S. 304 MATT - GLOSSY - TWO TONE - S.S. DIAMOND

MODEL : RH - 104
MATERIAL : S.S. 304

MODEL : PH - 204
MATERIAL : S.S. 304

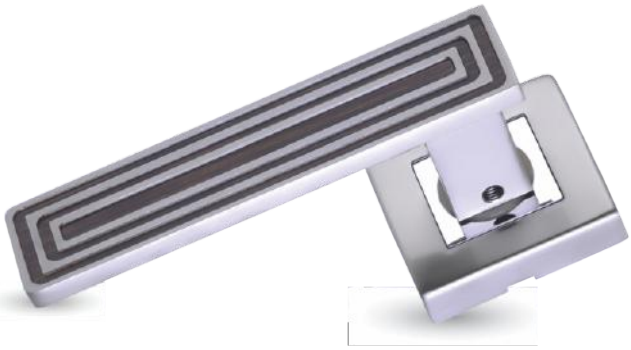

MODEL : RH - 105
MATERIAL : S.S. 304

MODEL : PH - 205
MATERIAL : S.S. 304

FINISH : S.S. 304 MATT - GLOSSY - TWO TONE - BLACK - WENGI

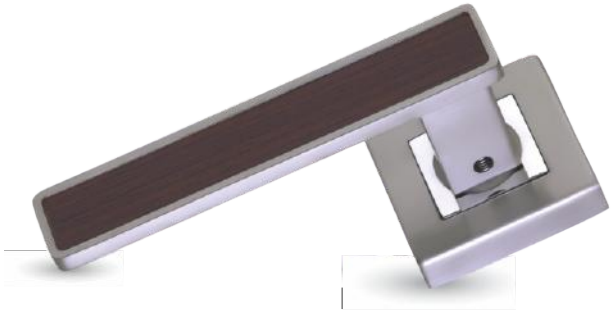

MODEL : RH - 106
MATERIAL : S.S. 304

MODEL : PH - 206
MATERIAL : S.S. 304

FINISH : S.S. 304 MATT - GLOSSY - TWO TONE - BLACK - WENGI

MODEL : RH - 107
MATERIAL : S.S. 304

MODEL : PH - 207
MATERIAL : S.S. 304

FINISH : S.S. 304 MATT - GLOSSY - TWO TONE

MODEL : RH - 108
MATERIAL : S.S. 304

MODEL : PH - 208
MATERIAL : S.S. 304

FINISH : S.S. 304 MATT - GLOSSY - TWO TONE

MODEL : RH - 109
MATERIAL : S.S. 304

MODEL : PH - 209
MATERIAL : S.S. 304

FINISH : S.S. 304 MATT - GLOSSY - TWO TONE

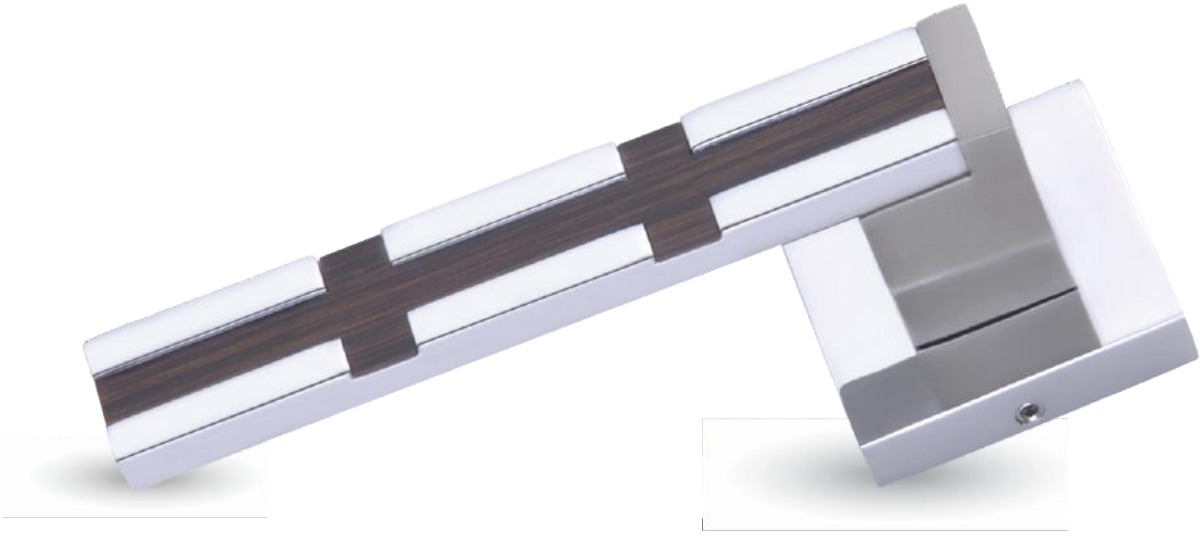

MODEL : RH - 110
MATERIAL : S.S. 304

FINISH : S.S. 304 MATT - GLOSSY - TWO TONE - BLACK - WENGI

MODEL : RH - 111
MATERIAL : S.S. 304

FINISH : S.S. 304 MATT - GLOSSY - TWO TONE - BLACK - WENGI

MODEL : RH - 112
MATERIAL : S.S. 304/202
SIZE : ø - 22 MM
FINISH : MATT, 2 TONE

MODEL : RH - 113
MATERIAL : S.S. 304/202
SIZE : ø - 22 MM
FINISH : MATT, 2 TONE

MODEL : RH - 114
MATERIAL : S.S. 304/202
SIZE : ø - 22 MM
FINISH : MATT, 2 TONE

MODEL : RH - 115
MATERIAL : S.S. 304/202
SIZE : 19x6 MM
FINISH : MATT, 2 TONE

MODEL : RH - 116
MATERIAL : S.S. 304/202
SIZE : 20x20 MM
FINISH : MATT, 2 TONE

MODEL : RH - 117
MATERIAL : S.S. 304/202
SIZE : 20x20 MM
FINISH : MATT, 2 TONE

MODEL : RH - 118
MATERIAL : S.S. 304/202
SIZE : ø - 22 MM
FINISH : MATT, 2 TONE

MODEL : RH - 119
MATERIAL : S.S. 304/202
SIZE : ø - 22 MM
FINISH : MATT, 2 TONE

MODEL : RH - 120
MATERIAL : S.S. 304/202
SIZE : 19x6 MM
FINISH : MATT, 2 TONE

MODEL : RH - 121
MATERIAL : S.S. 304/202
SIZE : ø - 22 MM
FINISH : MATT, 2 TONE

MODEL : RH - 122
MATERIAL : S.S. 304/202
SIZE : ø - 20 MM
FINISH : MATT, 2 TONE

MODEL : RH - 123
MATERIAL : S.S. 304/202
SIZE : ø - 22 MM
FINISH : MATT, 2 TONE

MODEL : RH - 124
MATERIAL : S.S. 304/202
SIZE : ø - 22 MM
FINISH : MATT, 2 TONE

MODEL : RH - 125
MATERIAL : S.S. 304/202
SIZE : 19x6 MM
FINISH : MATT, 2 TONE

MODEL : RH - 126
MATERIAL : S.S. 304/202
SIZE : ø - 22 MM
FINISH : MATT, 2 TONE

MODEL : RH - 127
MATERIAL : S.S. 304/202
SIZE : ø - 22 MM
FINISH : MATT, 2 TONE

MODEL : RH - 128
MATERIAL : S.S. 304/202
SIZE : ø - 22 MM
FINISH : MATT, 2 TONE

MODEL : RH - 129
MATERIAL : S.S. 304/202
SIZE : ø - 22 MM
FINISH : MATT, 2 TONE

MODEL : RH - 130
MATERIAL : S.S. 304/202
SIZE : ø - 22 MM
FINISH : MATT, 2 TONE

MODEL : RH - 131
MATERIAL : S.S. 304/202
SIZE : ø - 22 MM
FINISH : MATT, 2 TONE

MODEL : RH - 132
MATERIAL : S.S. 304/202
SIZE : ø - 22 MM
FINISH : MATT, 2 TONE

MODEL : RH - 133
MATERIAL : S.S. 304/202
SIZE : ø - 22 MM
FINISH : MATT, 2 TONE

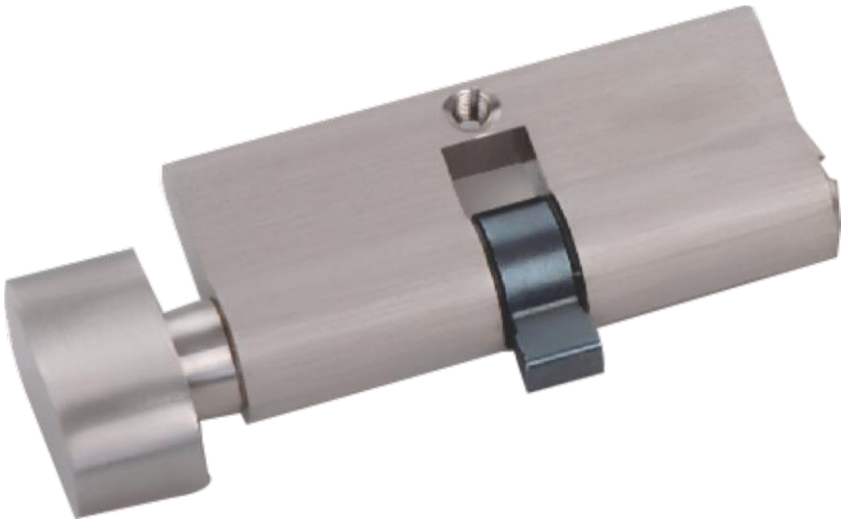

Model No. Lock Body & Cylinder Computer Key

Finish : S.S. 304 & Brass Matt - Glossy - Two Tone

	Finish
1	Matt
2	C.P.

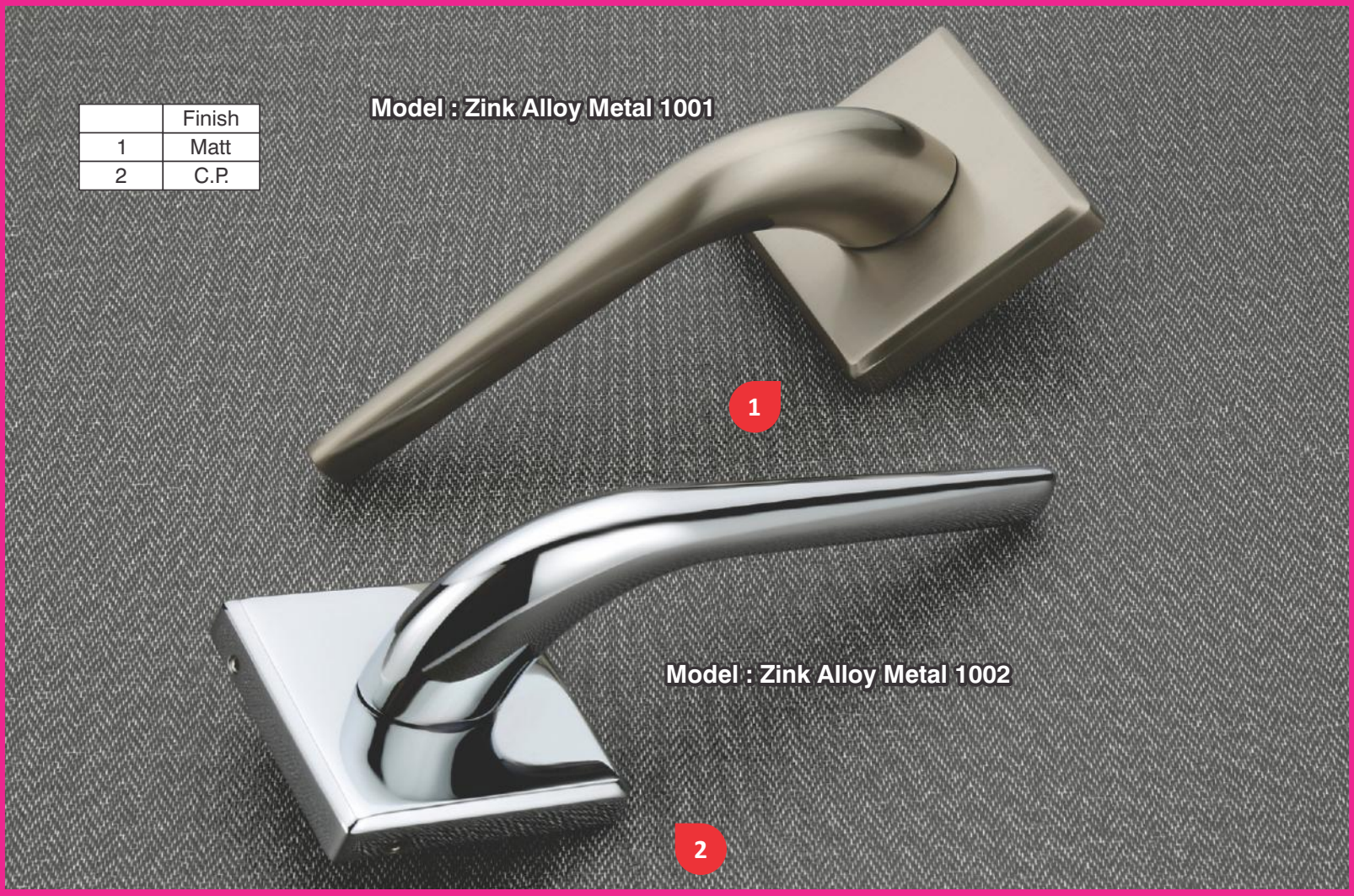

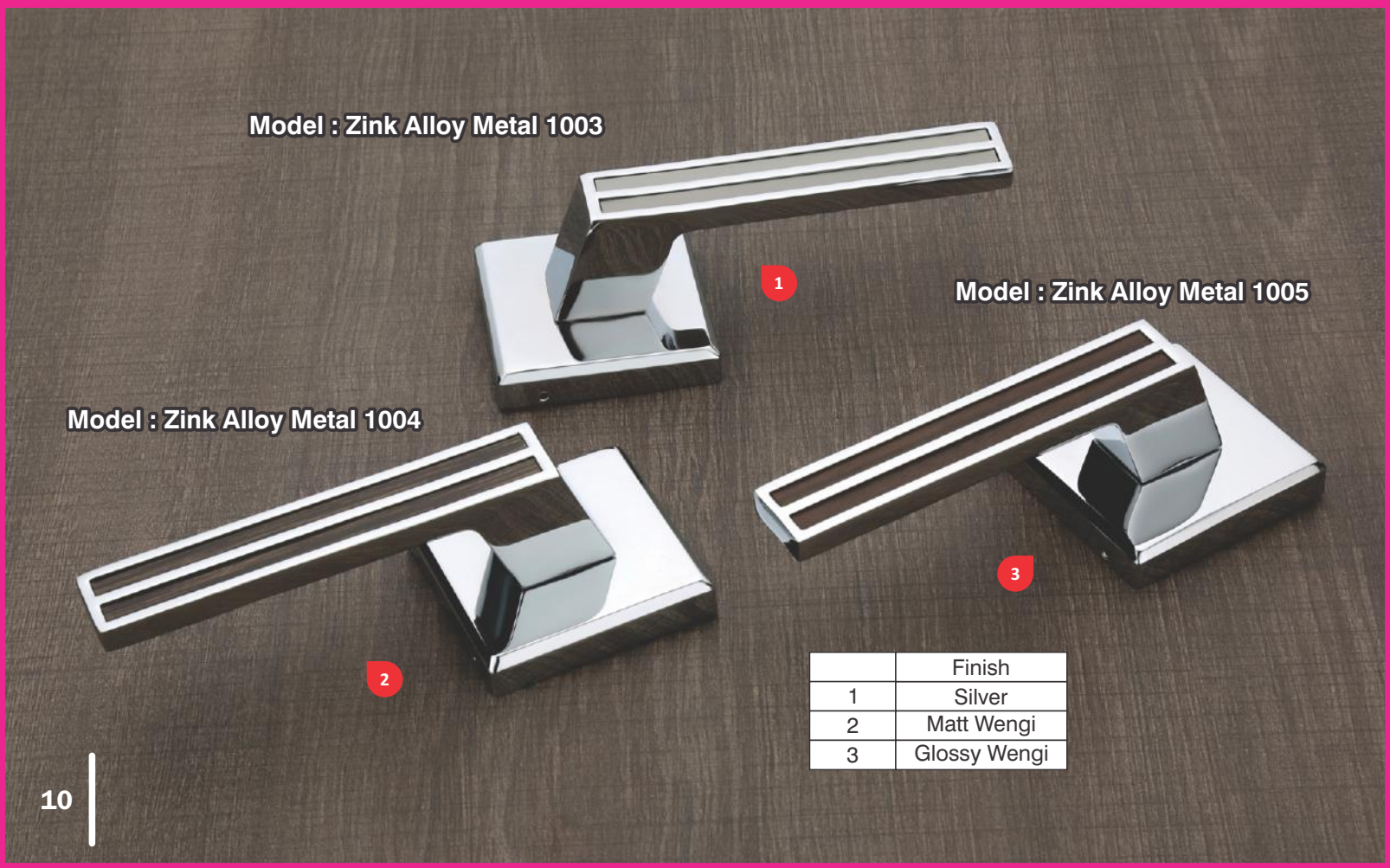

	Finish
1	Silver
2	Matt Wengi
3	Glossy Wengi

Model : Zink Alloy Metal 1006

Model : Zink Alloy Metal 1008

Model : Zink Alloy Metal 1007

Model : Zink Alloy Metal 1009

	Finish
1	Silver
2	Matt Wengi
3	Glossy Wengi
4	Antique

Model : Zink Alloy Metal 1010

Model : Zink Alloy Metal 1012

Model : Zink Alloy Metal 1011

	Finish
1	Silver
2	Glossy Wengi
3	Matt Wengi

Model : Zink Alloy Metal 1013

Model : Zink Alloy Metal 1014

Model : Zink Alloy Metal 1015

	Finish
1	C.P.
2	Antique
3	Matt

Model : Zink Alloy Metal 1017

Model : Zink Alloy Metal 1016

	Finish
1	Matt
2	C.P.

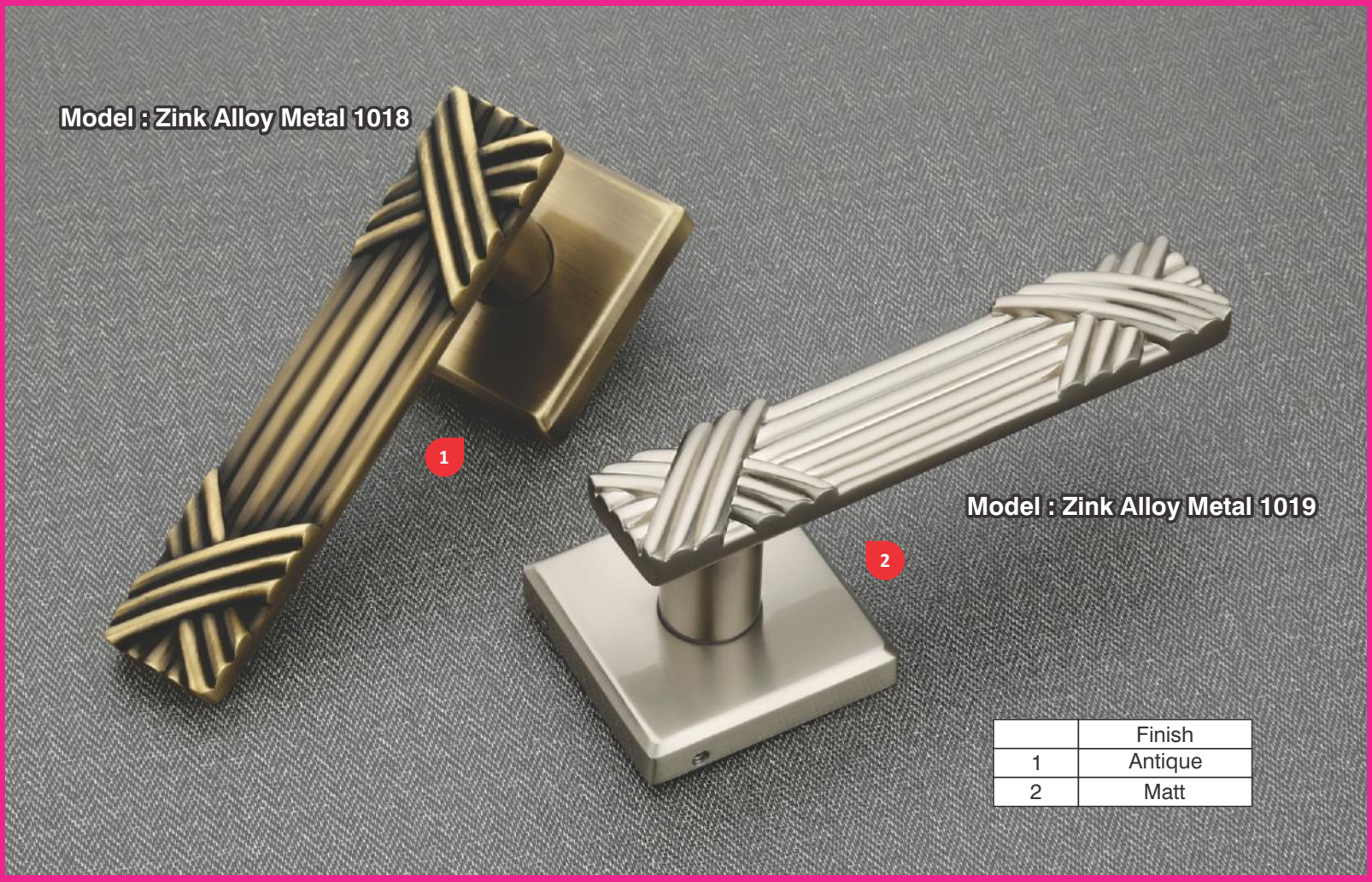

	Finish
1	Antique
2	Matt

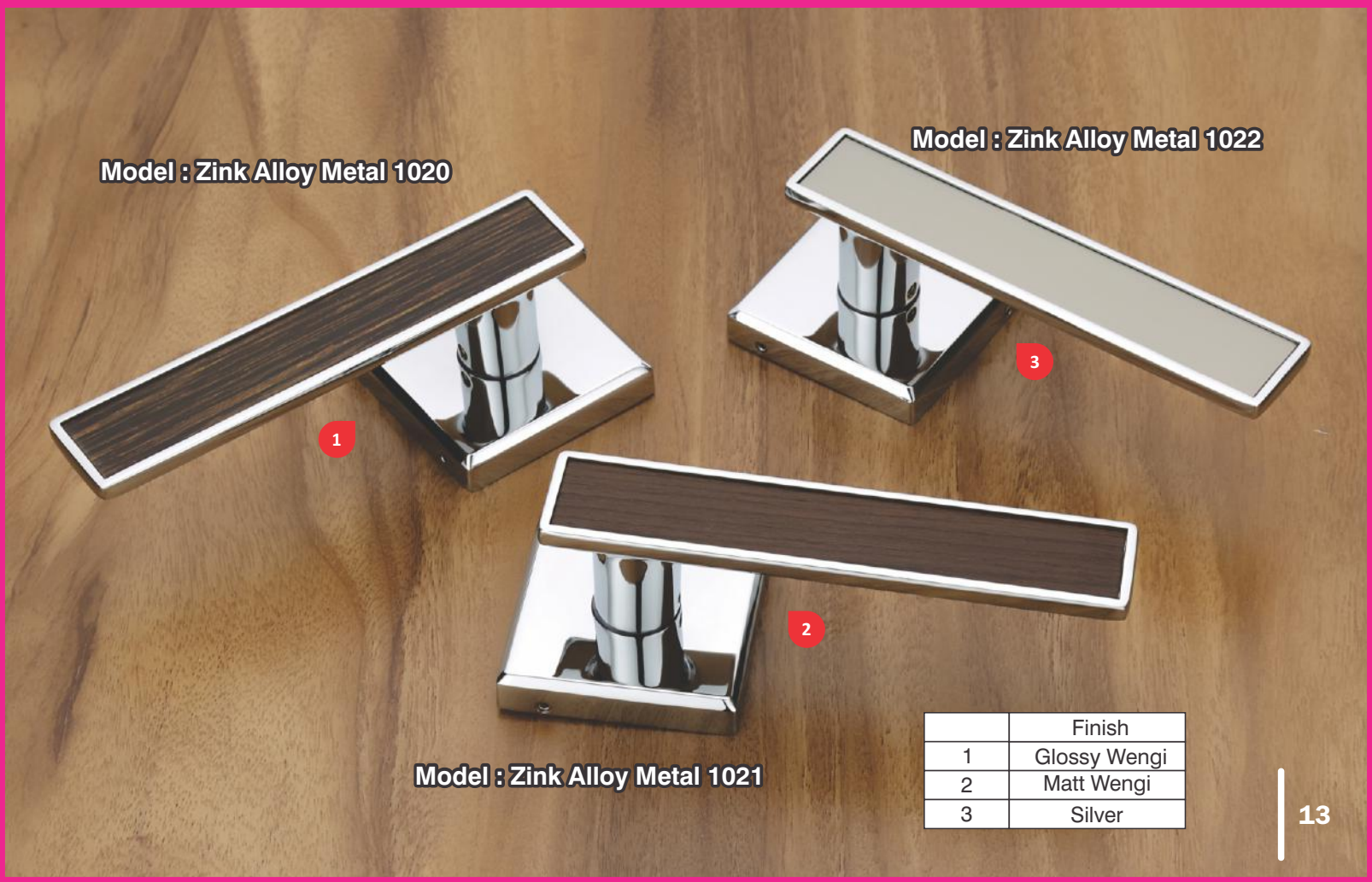

	Finish
1	Glossy Wengi
2	Matt Wengi
3	Silver

Model : Zink Alloy Metal 1023

Model : Zink Alloy Metal 1024

	Finish
1	Antique
2	Matt

Model : Zink Alloy Metal 1025

Model : Zink Alloy Metal 1026

Model :
Zink Alloy Metal
1027

	Finish
1	Antique
2	Matt
3	C.P.

Model : Zink Alloy Metal 1028

Model : Zink Alloy Metal 1029

	Finish
1	C.P. Wengi MOP
2	C.P. White MOP

Model : Zink Alloy Metal 1030

Model : Zink Alloy Metal 1031

	Finish
1	C.P.
2	Matt

Model : Zink Alloy Metal 1032

Model : Zink Alloy Metal 1034

Model : Zink Alloy Metal 1033

	Finish
1	Matt
2	Two Tone
3	C.P.

Model : Zink Alloy Metal 1037

Model : Zink Alloy Metal 1035

Model : Zink Alloy Metal 1036

	Finish
1	Glossy Wengi
2	Silver
3	Matt Wengi

Model : Zink Alloy Metal 1038

Model : Zink Alloy Metal 1039

Model : Zink Alloy Metal 1040

Model : Zink Alloy Metal 1041

Model : Zink Alloy Metal 1042

Model : Zink Alloy Metal 1043

Model : Zink Alloy Metal 1044

Model : Zink Alloy Metal 1045

Model : Zink Alloy Metal 1046

Model : Zink Alloy Metal 1047

Model : Zink Alloy Metal 1048

Model : Zink Alloy Metal 1049

Model : RH 1050

Finish : S.S. 304 Matt - Glossy - Two Tone

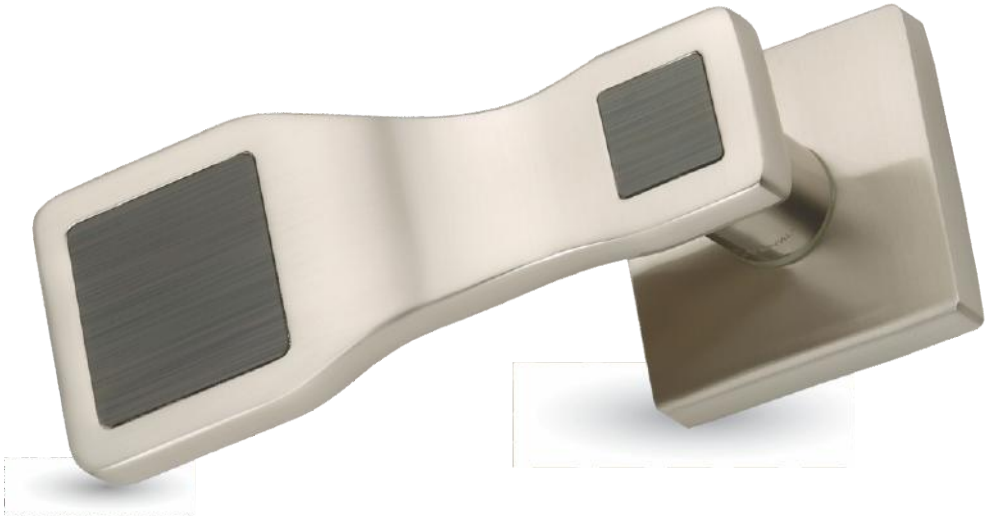

Model : RH 1051

Finish : S.S. 304 Matt - Glossy - Two Tone

Model : RH 1052

Finish : Silver Mica - Wengi Mica - Matt Wengi

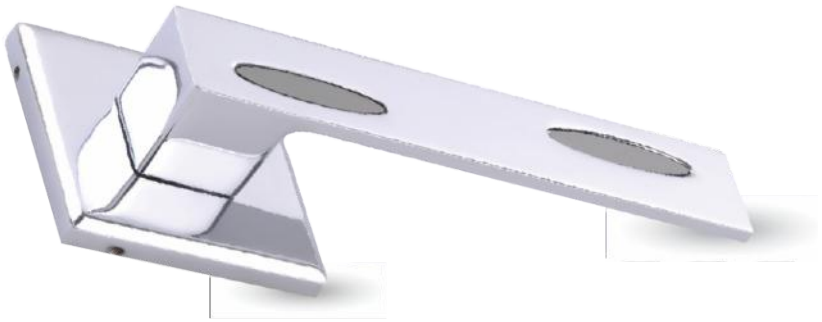

Model : RH 1053

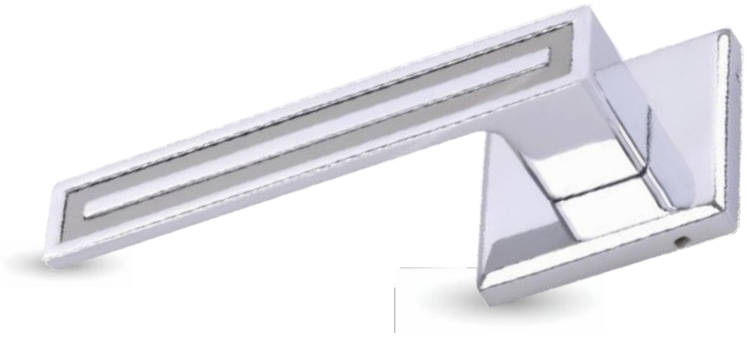

Model : RH 1054

Model : RH 1055

Model : RH 1056

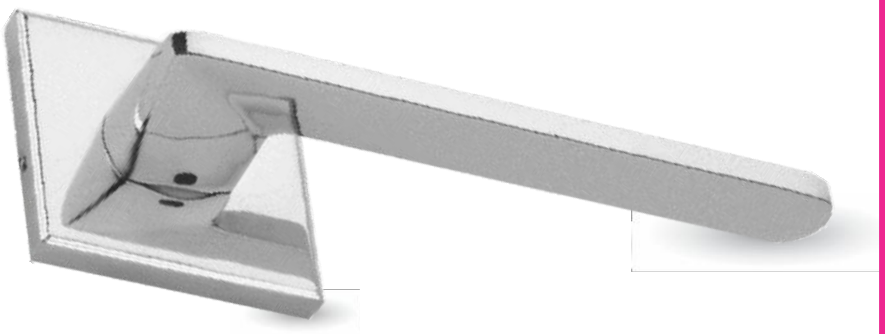

Model : RH 1057

Model : RH 1058

Model : RH 1059

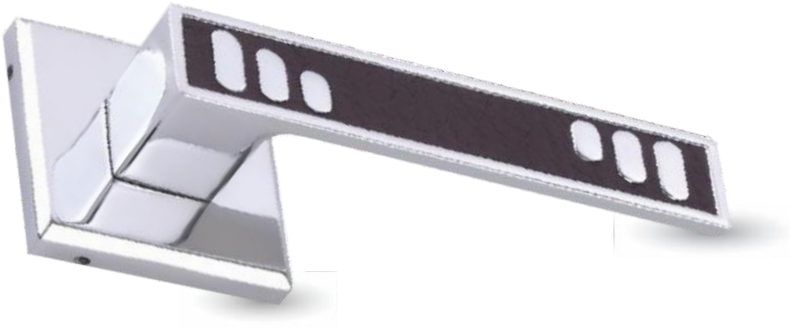

Model : RH 1060

Model : RH 1061

Model : RH 1062

Model : RH 1063

Model : 1064

Model : 1065

Model : 1066

Model : 1067

Model : Zink Alloy Metal 1068

	Finish
1	Matt

Model : Zink Alloy Metal 1069

	Finish
1	Matt

Model : Zink Alloy Metal 1070

	Finish
1	Matt

Model : Zink Alloy Metal 1071

	Finish
1	Matt

	Finish
1	Matt
2	Two Tone

Model : PH 1074

Model : PH 1075

Model : PH 1076

Model : PH 1077

Model : PH 1078

Model : PH 1079

Model : PH 1080

Model : PH 1081

Model : PH 1082

Model : PH 1083

Model : PH 1084

Model No. : **Cylindrical Lock 2001**

Model No. : **Cylindrical Lock 2002**

Model No. : **Cylindrical Lock 2003**

Model No. : **Cylindrical Lock 2004**

Model No. : **Night Lock 2005**

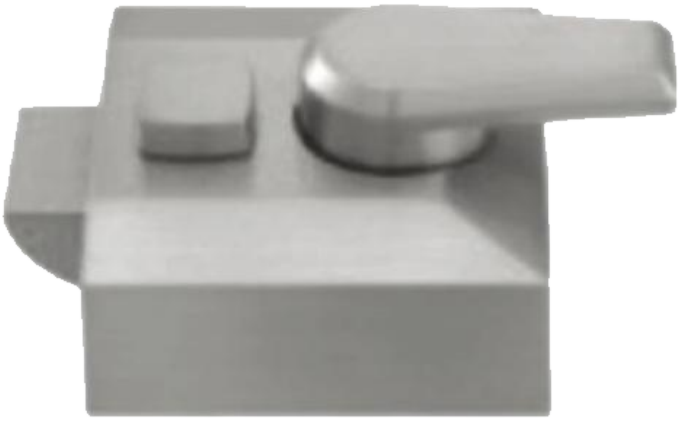

Model No. : **Night Lock 2006**

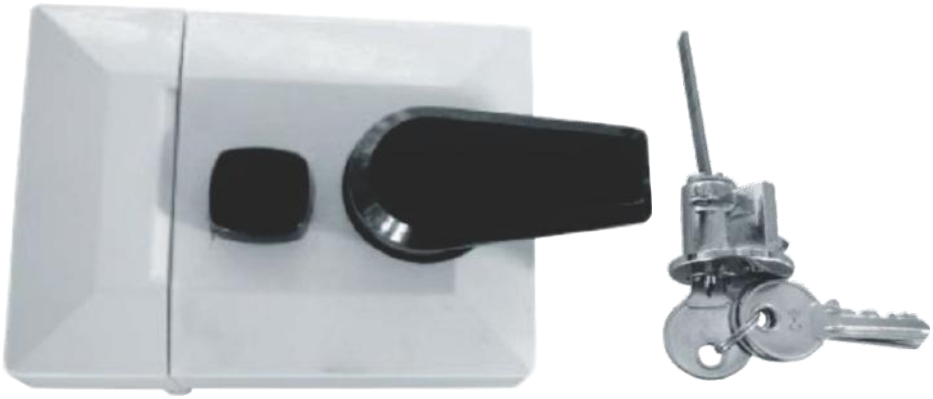

Model No. : **Night Lock 2007**

Model No. : **Night Lock 2008**

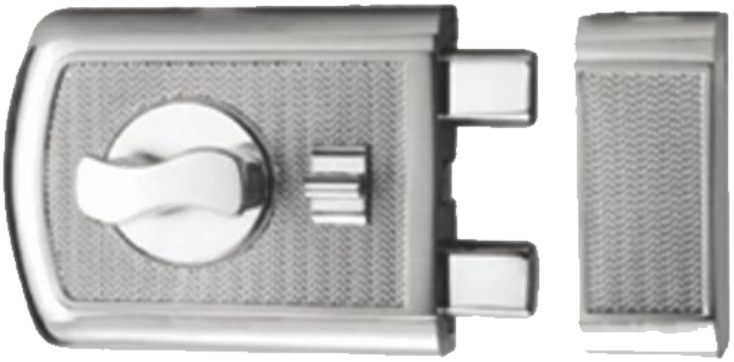

Model No. : **Night Lock 2009**

Model No. : **Night Lock 2010**

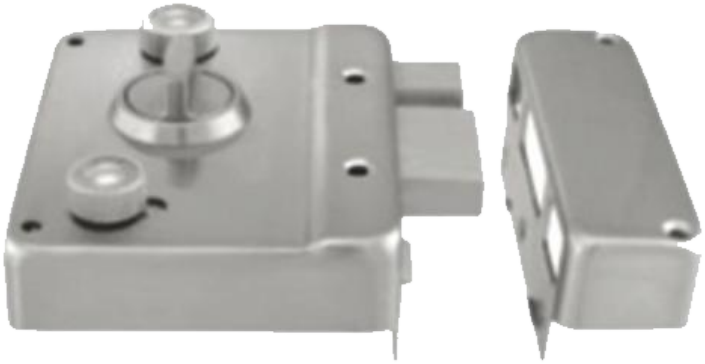

Model No. Maharaja Vintage

210106

Finish : Brass Antique

Model No. Maharaja Vintage

210107

Finish : Brass Antique

Model No. Maharaja Vintage

210108

Finish : Brass Antique

Model No. Maharaja Vintage

210110

Finish : Brass Antique

Model No. Maharaja Vintage

210109

Finish : Brass Antique

210120
Chief 80mm
6 Lvr. L & R
Solid Locking Bolt
C.P. Finish

210121
Pin Cylindrical
SS Finish, 3 Brass keys
Solid Brass Tumbler
Neck Size : 23, 29 & 35mm

210122
Dimple Technology
SS Finish, 3 Brass keys
Neck Size : 23, 30 & 35mm

210123
Solid Brass Locking Bolt
Extra Attachment for
23 & 29mm

210124
1166 Focus
23, 29 & 32mm

210125
ULTRON
Dimple Brass keys
High Key Combination

Master Key
also available

210126
DIMPO
Dimple Brass Keys
High key Combition

Common Sets (Division) are also
available in all type of multi

210126
WAVKA
Laser Brass Keys
High key Combition

210127
PINKA 21
Pin Cylinder
Brass Keys & Tumbler

210128
PINKA 27
pin Cylinder
Brass Keys & Tumbler

210129
PINKA 32
pin Cylinder
Brass Keys & Tumbler

210130
PINKA ULTRA 21
Dimple Technology
Brass Keys & Tumbler

210131
PINKA ULTRA 27
Dimple Technology
Brass Keys & Tumbler

210132
PINKA ULTRA 32
Dimple Technology
Brass Keys & Tumbler

With
Glass Protective
Plate

210133
ESTEEM
Brass Lvr. for Sliding Glass Door
Upto 8mm Glass

210134
SINGLE DOOR
Brass Lvr. for Openable Glass Door
Upto 8mm & 12mm

210135
DOUBLE DOOR
Brass Lvr.
for Openable Glass Door
Upto 8mm & 12mm

210136
HONDA Heavy Duty
6 Brass Lvr.
Plastic Head keys

210137
YOUNGRR
6 Brass Lvr.

210138
JENGO
Double Turn

210139
GDR 6 Brass Lvr.
Solid Brass Keys & Ring

210140
FUSION 6 Levers
Strong MS Body

210141
ATOOT 6 Brass Lvr.
Extra Long Ms Locking Bolt

210141
HUNK 7 Brass Lvr.
Extra Long Locking Bolt

210142
BUDGET
7Brass Lvr.

210143
7 Brass Lvr.
SS Finish, D/T

210144
LORD 32mm
7 Brass Lvr.
SS Finish, D/T

210145
DUAL D/T
6 Brass Lvr.
Brass Keys & Ring

210146
DUAL D/T
6 Brass Lvr.
Plastic Head Keys

210147
NICOL D/T
6 Brass Lvr.

210148
CHROMA 21
for 19mm Panel

210149
CHROMA 27
for 25mm Panel

210150
CHROMA 32
for 32mm Panel

210151
CHROMA 40
for 38mm Panel

210136
Brass Mortice
65mm, D/T, SS Keys,

210137
Korindo Big
Bullet, D/T

210138
Kid, D/T,

210139
Korindo Junior
D/T,

210140
Korindo Big
D/T, SS Cram

210140
Korindo Big
Tripin, D/T

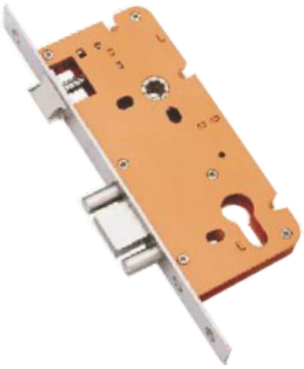

210141
Korindo Big
Hudka Bullet

with
Ultra Keys
also

210142
Bullet Cy, Dead
70mm, OSK with 2 Keys hole

with
Ultra Keys
also

210143
Plain Bolt Cy. Dead
70mm, OSK with 2 hole

210170
Pulsar Handle
with key
Push System
Heavy, L & R

210171
'Z' Handel
L & R

210172
ALUKA
Concealed Sliding
Window Latch

210173
ALUKA 8"
Concealed Sliding
Window Latch

210176
Inter Lock - 6 Turn
Pin Cylinder, 3 Brass Keys
Full SS, Ivory / Gold

210177
Inter Lock - 3 Turn
Pin Cylinder, 3 Brass Keys
Full SS, Ivory / Gold

210178
6" Brass Door Lock
4 Turn, Long Keys

210179
16 Lvr. Partner Lock
3 Turn

210180
4" Brass 2 in 1
Double Turn

210181
Deluxe 2 in 1
8 Lvr. D/T
Solid Brass Hudka
& Latch

210182
MS 2 in 1
8 Lvr. D/T

210183
Royal 2 in 1
8 Lvr. D/T

210184
Bullet 2 in 1
8 Lvr. D/T

210185
Night Latch
Pin Cylindrical
3 Brass Keys
SS Finish

210186
Night Latch
Pin Cylindrical
3 Brass Keys
Ivory/Gold Finish

Rich Curtain Brackets

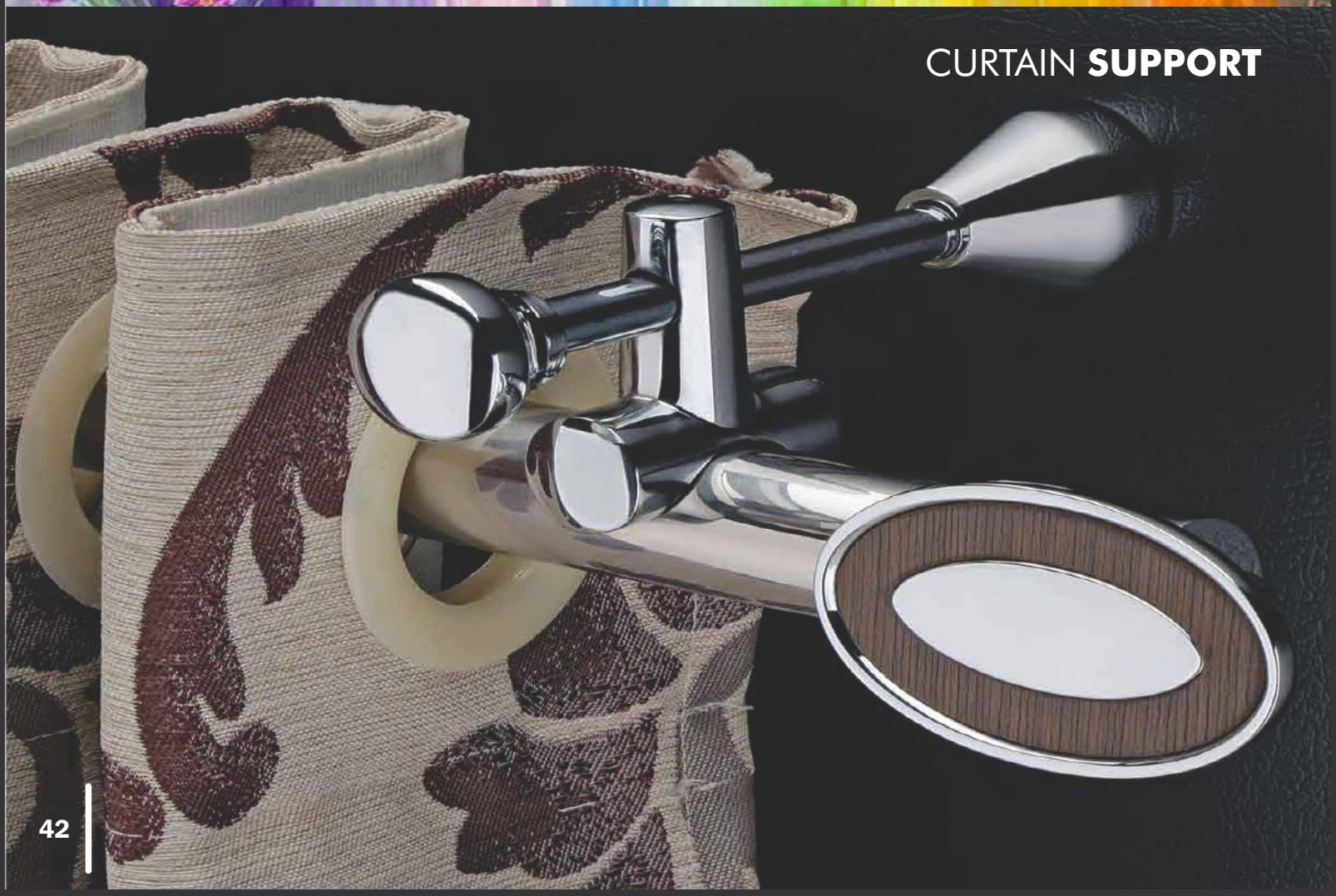

CURTAIN **SUPPORT**

Rich Curtain Brackets

model : CB-01

White

SS

Blue

Walnut

Brown

Black

Pink

Green

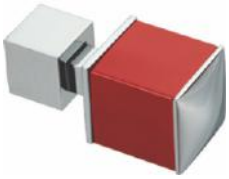

Red

model : CB-02

White

SS

Blue

Walnut

Brown

Black

Pink

Green

Red

Rich Curtain Brackets

model : CB-03

White

SS

Blue

Walnut

Brown

Black

Pink

Green

Red

model : CB-04

White

SS

Blue

Walnut

Brown

Black

Pink

Green

Red

Green Wood

Deco Walnut

Choco Walnut

Rich Curtain Brackets

model : CB-05

White

SS

Blue

Walnut

Brown

Black

Pink

Green

Red

model : CB-06

Matt Lacquer

Chrome

Pink

Black

White

White Pink

Black White

Rich Curtain Brackets

model : CB-07

White

SS

Blue

Walnut

Brown

Black

Pink

Green

Red

model : CB-08

Matt Lacquer

Chrome

Brass Antique

Rich Curtain Brackets

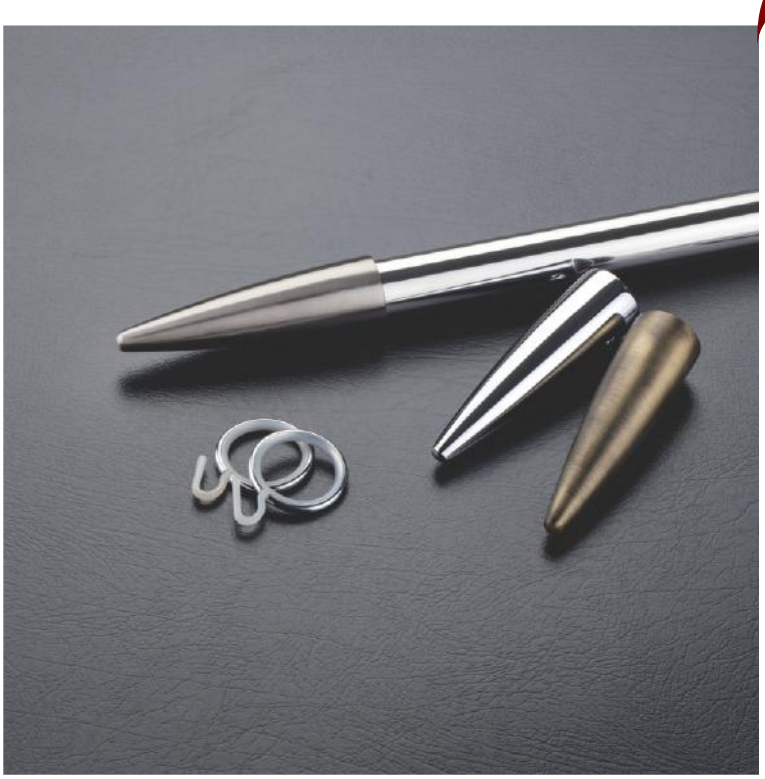

model : CB-09

Matt Lacquer

Chrome

Brass Antique

model : CB-10

White

SS

Blue

Walnut

Brown

Black

Pink

Green

Red

Rich Curtain Brackets

model : CB-11

White

SS

Blue

Walnut

Brown

Black

Pink

Green

Red

model : CB-12

White

SS

Blue

Walnut

Brown

Black

Pink

Green

Red

Rich Curtain Brackets

model : CB-13

White

SS

Blue

Walnut

Brown

Black

Pink

Green

Red

model : CB-14

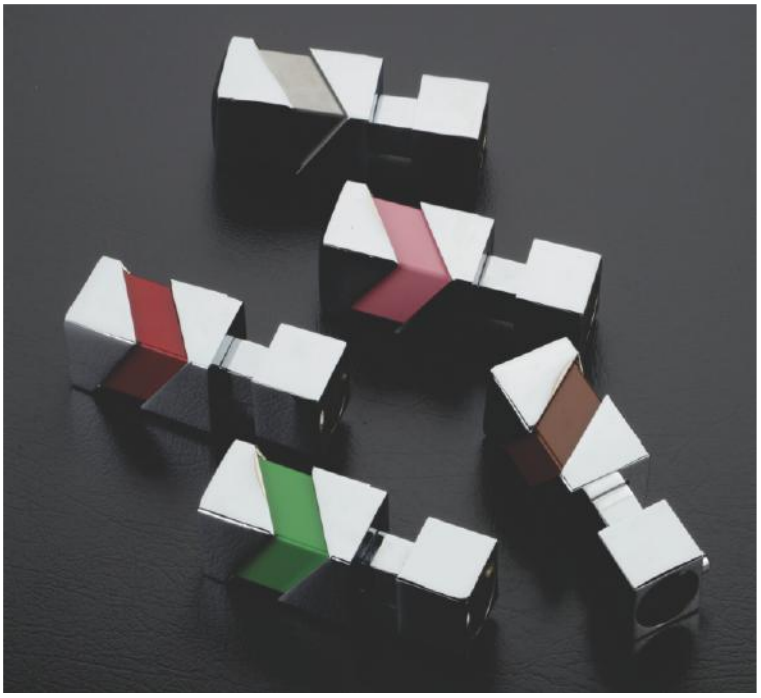

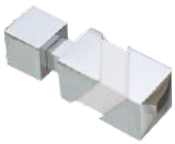

White

SS

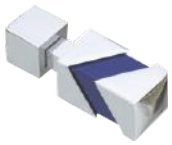

Blue

Walnut

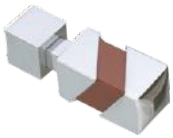

Brown

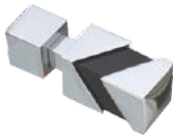

Black

Pink

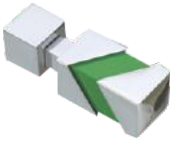

Green

Red

Rich Curtain Brackets

model : CB-15

White

SS

Blue

Walnut

Brown

Black

Pink

Green

Red

model : CB-16

Pink

Blue

Green

Walnut

Brown

Rich Curtain Brackets

model : CB-17

Pink

White

Brown

Black

model : CB-18

White

Natural Wood

Walnut

Black

Pink

Rich Curtain Brackets

model : CB-19

White

Black

Walnut

model : CB-20

White

Natural Wood

Walnut

Black

Pink

Rich Curtain Brackets

model : CB-21

White

SS

Black

Brown

Walnut

Pink

Red

model : CB-22

White

SS

Black

Red

Choco Walnut

Rich Curtain Brackets

model : CB-23

White

SS

Black

Choco Walnut

Brown

Brass Antique

model : CB-24

CP

Matt Lacquer

Walnut

Brass Antique

Silver Antique

Rich Curtain Brackets

model : CB-25

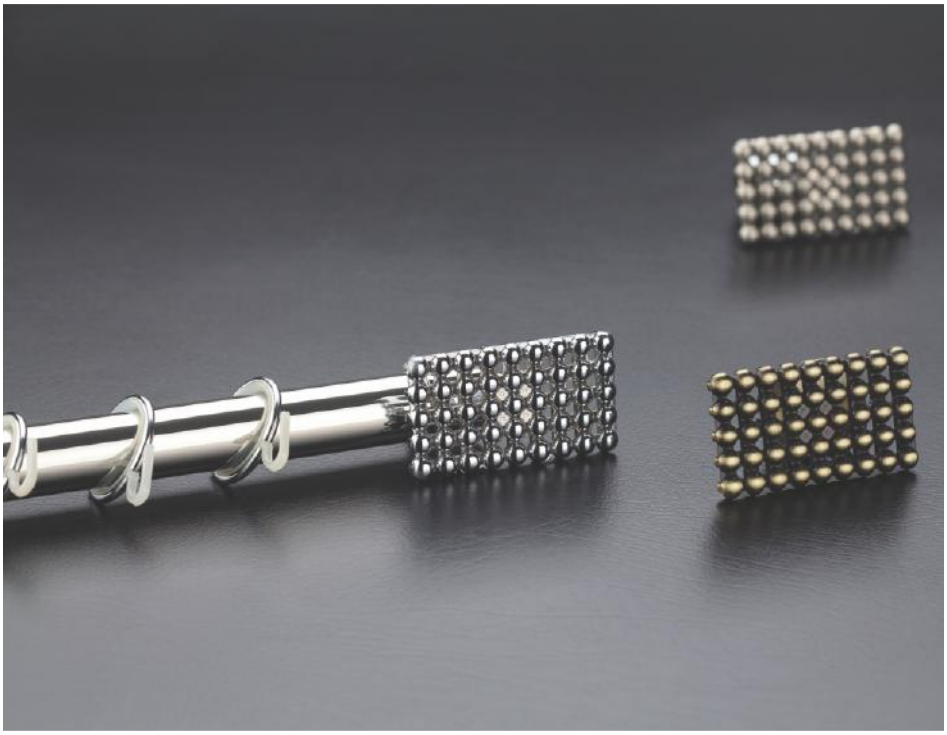

Matt Lacquer

CP

Silver Antique

Brass Antique

model : CB-26

White

SS

Blue

Brown

Red

Black

Pink

Walnut

Rich Curtain Brackets

model : CB-27

SS

Walnut

model : CB-101

White

Sky Blue

Pnik

Black

Red

Copper

Golden

Rich Curtain Brackets

WOOD SERIES

model : CB-102

model : CB-51

model : CB-52

model : CB-53

Rich Curtain Brackets

model : CB-54

model : CB-57

model : CB-58

model : CB-59

Rich Curtain Brackets

model : CB-60

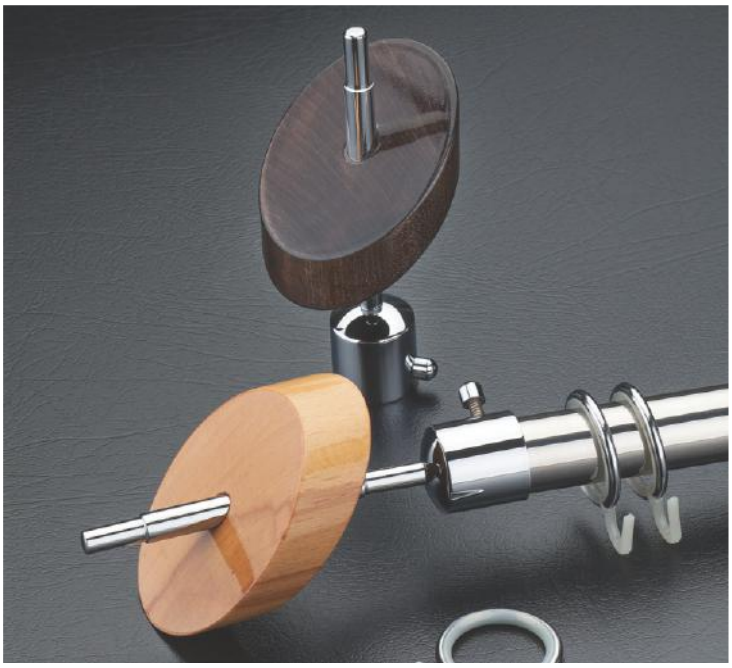

model : CB-61

model : CB-62

model : CB-63

Rich Curtain Brackets

model : CS-01

model : CS-02

model : CS-03

model : CS-04

Rich Curtain Brackets

model : CS-05

model : CS-06

model : CS-07

model : CS-08

Rich Curtain Brackets

model : CS-09

model : CS-10

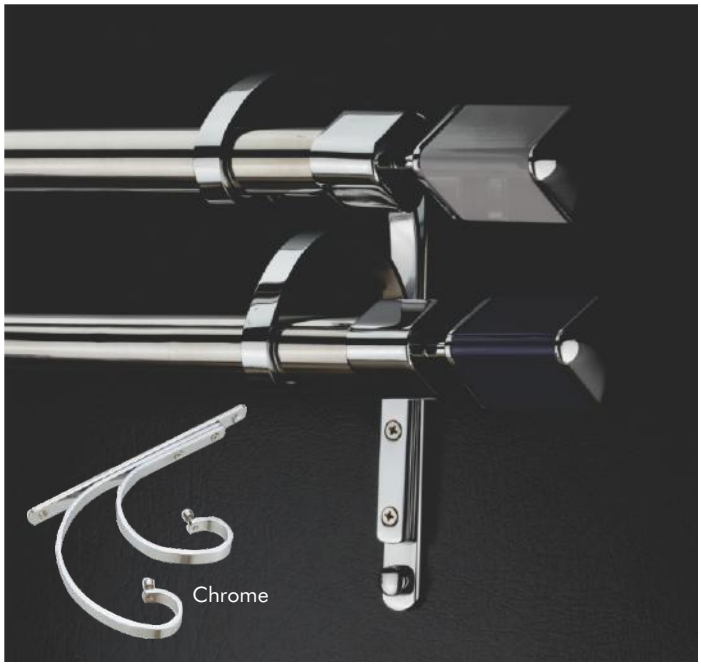

model : CS-11

model : CS-12

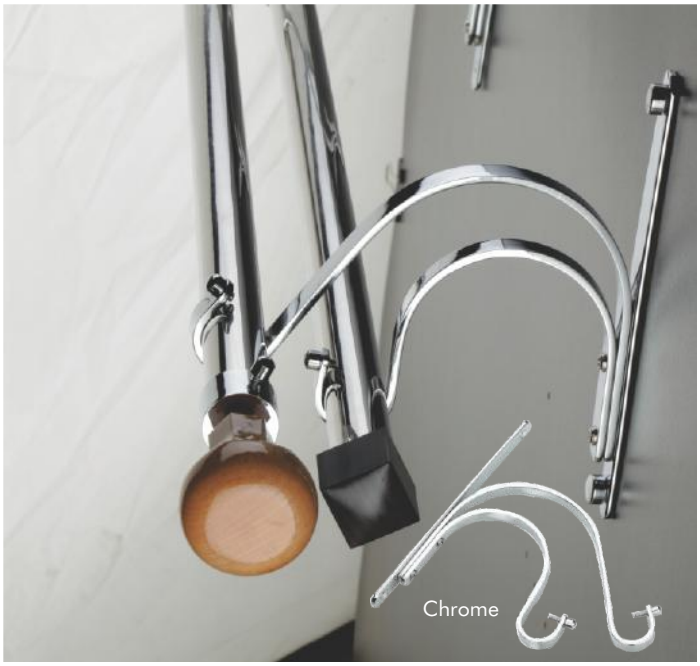

Rich Curtain Brackets

model : CS-13

model : CS-14

model : CS-15

model : CS-16

Rich Curtain Brackets

model : CS-17

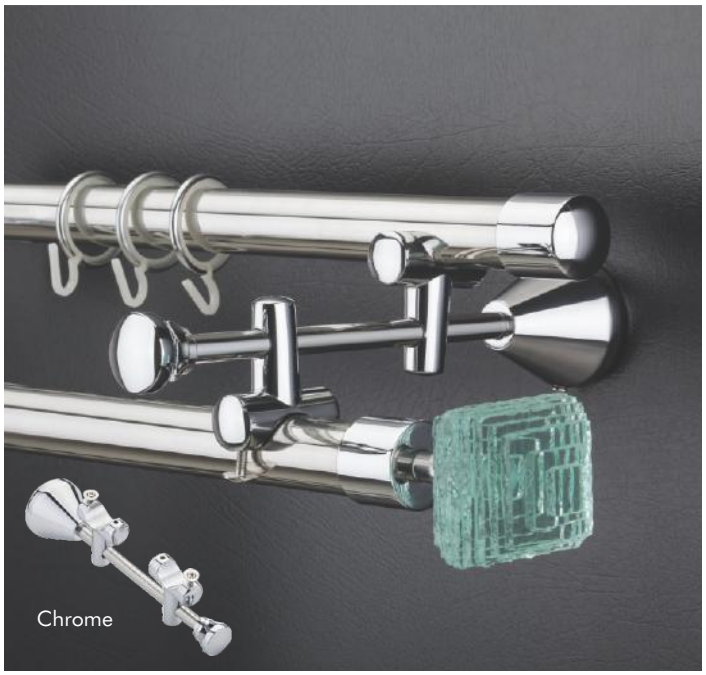

model : CS-18

TIEBACKS

model : TB-05

Chrome

Rich Curtain Brackets

model : TB-01

model : TB-02

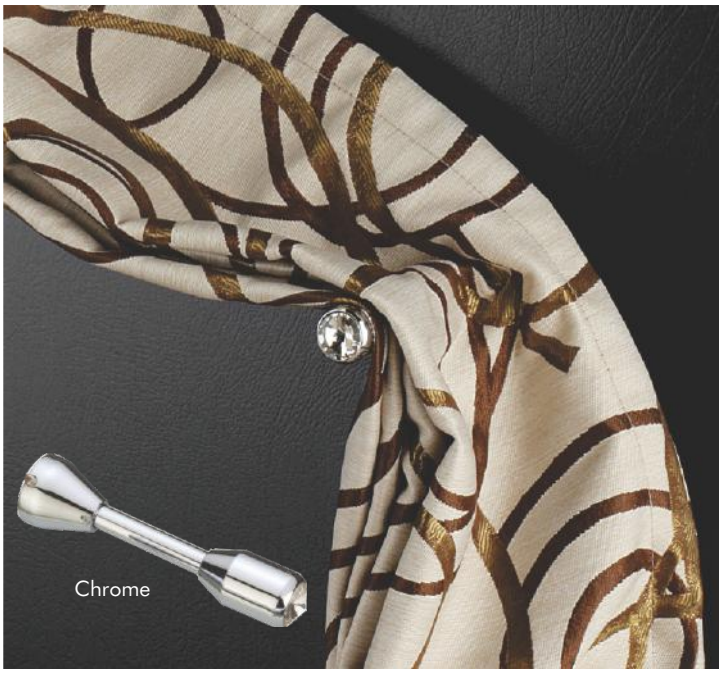

model : TB-03

model : TB-04

ROBE **HOOKS**

model : RH-2001

Available size : 3 to 6 Hooks

Rich Curtain Brackets

model : RH-1001

Available size : 2 to 7 Hooks

Chrome

Matt Lacquer

Brass Antique

model : RH-1002

Available size : 2 to 7 Hooks

Chrome

Matt Lacquer

Brass Antique

Rich Curtain Brackets

model : RH-1003

Available size : 2 to 7 Hooks

Chrome

Matt Lacquer

Brass Antique

model : RH-1004

Available size : 2 to 7 Hooks

Chrome

Matt Lacquer

Brass Antique

Rich Curtain Brackets

END CAPS

model : EC-21

Chrome

Matt Lacquer

Walnut

model : EC-22

Walnut

Matt Lacquer

Chrome

CONCEALED

model : CO-01

Chrome

Matt Lacquer

Walnut

RING

model : R-01

Chrome

* Premium Curtain Brackets

PB-01

PB-02

PB-03

PB-04

PB-05

PB-06

PB-07

PB-08

PB-09

PB-10

PB-11

PB-12

PB-13

PB-14

PB-15

PB-16

PB-17

PB-18

PB-19

PB-20

PB-21

* Premium Curtain Brackets

PB-22
A - Silver-C

PB-23
A - English-C

PB-24
A - Wengy-C

PB-25
A - Silver-I

PB-26
A - English-I

PB-27
A - Wengy-I

PB-28
A - Silver-3

PB-29
A - English-3

PB-30
A - Wengy-3

PB-31
A - Silver-2

PB-32
A - English-2

PB-33
A - Wengy-2

PB-34
A - Silver-AMB.

PB-35
A - English-AMB.

PB-36
A - Wengy-AMB.

RAJWADI

PB-37
R - Silver-I

PB-38
R - English-C

PB-39
R - Wengy-AMB.

PB-40
S.S. Silver

PB-41
S.S. Green

PB-42
S.S. Brown

PB-43
S.S. Wengy

PB-44
S.S. Sky

PB-45
Diamond

* Premium Curtain Brackets

PB-46
Diamond

PB-47
Diamond

PB-48
Diamond

PB-49
Diamond

PB-50
S-Cut Wengi

PB-51
S-Cut Purple

PB-52
Blue

PB-53
S-Cut Red

PB-54
Q.B. Wood

PB-55
Q.B. Wengi

PB-56
A. Silver

PB-58
A. Wengi

PB-59
Q.B. L-Wengi

PB-60
Q.B. L-Wood

PB-61
Silver

PB-62
Orange

PB-63
Red

PB-64
Coffee

PB-65
Blue

PB-66
Green

PB-67
Pink

PB-68
Wengy

PB-69
Wengy

PB-70
Wengy

* Premium Curtain Brackets

PB-71

PB-72

PB-73

PB-74

PB-75

PB-76

PB-77

PB-78

PB-79

PB-80

PB-81

PB-82

PB-83

PB-84

PB-85

PB-86

PB-87

PB-88

PB-89

PB-90

PB-91

PB-92

PB-93

PB-94

* Premium Curtain Brackets

PB-95

PB-96

PB-97

PB-98

PB-99

PB-100

PB-101

PB-102

PB-103

PB-104

PB-105

PB-106

PB-107

PB-108

PB-109

PB-110

PB-111

PB-112

PB-113

PB-114

PB-115

PB-116

PB-117

PB-118

* Premium Curtain Brackets

PB-119

PB-120

PB-121

PB-122

PB-123

PB-124

PB-125

PB-126

PB-127

PB-128

PB-129

PB-130

PB-131

PB-132

PB-133

PB-134

PB-135

PB-136

PB-137

PB-138

PB-139

PB-140

PB-141

PB-142

* Premium Curtain Brackets

PB-143

PB-144

PB-145

PB-146

PB-147

PB-148

PB-149

PB-150

PB-151

PB-152

PB-153

PB-154

PB-155

PB-156

PB-157

PB-158

PB-159

PB-160

PB-161

PB-162

PB-163

PB-164

PB-165

PB-166

* Premium Curtain Brackets

PB-167
Blue

PB-168
Wallnut

PB-169
Brown

PB-170
Navrang

PB-171
Green

PB-172
Green

PB-173
Wallnut

PB-174
S.S.

PB-175
Blue

PB-176
Chikoo

PB-177
Green

PB-178
Wallnut

PB-179
S.S.

PB-180
Blue

PB-181

PB-182
Blue

PB-183
Green

PB-184
Wallnut

PB-185
Navrang

PB-186
Wengi

* Premium Curtain Brackets

PB-187
Wallnut

PB-188
Brown

PB-189
S.S.

PB-190
Wallnut

PB-191
Red

PB-192
Blue

PB-193
Wallnut

PB-194
S.S.

PB-195
Brown

PB-196
Wengi

PB-197
Brown

PB-198
S.S.

PB-199
Wallnut

PB-200
Brown

PB-201
S.S.

PB-202
Brown

PB-203
Wengi

PB-204
Brown

PB-205

PB-206

PB-207

* Premium Curtain Brackets

PB-208
A - Silver

PB-209
A - English

PB-210
A - Wengy

PB-211

PB-212
A - Wengy

PB-213

PB-214

PB-215

PB-216

PB-217

PB-218

PB-219

PB-220

PB-221

PB-222

PB-223

PB-224

* Premium Curtain Brackets

PB-238
Support

PB-239
Support

PB-240
Allu. Support

PB-241

PB-242
S.S. Support (Matt)
Size : 2.5x12 mm

PB-243
S.S. Support (Matt)
Size : 2.5x16 mm

PB-244
S.S. Support (CP)
Size : 2.5x16 mm

PB-245
S.S. Support (CP)
Size : 3x16 mm

PB-246
S.S. Support (CP)
Size : 4x16 mm

PB-247
S.S. Double Support (CP)
Size : 3x16 mm

PB-248
S.S. Double Support (CP)
Size : 4x16 mm

PB-249
S.S. Double Support (Matt)
Size : 2.5x12 mm

PB-250
WM Support (Matt)

PB-251
Long-Band

PB-252
Band

PB-253
Heavy Consil

PB-254
Consil

PB-255
Consil

* Premium Curtain Brackets

PB-256

PB-257

PB-258

PB-259

PB-260

PB-261

PB-262

PB-263

PB-264

PB-265

PB-266

PB-267

PB-268

PB-269

PB-270

PB-271

PB-272

PB-273

PB-274

PB-275

* Premium Curtain Brackets

PB-276

PB-277

PB-278

PB-279

PB-280

PB-281

PB-282

PB-283

PB-284

PB-285

PB-286

PB-287

PB-288

PB-289

PB-290

PB-291

PB-292

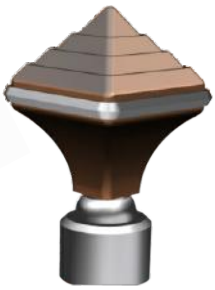

PB-293

PB-294

PB-295

* Premium Curtain Brackets

PB-296
S.S. 2-Step

PB-297
S.S. 2-Step

PB-298
S.S. 2-Step

PB-299
S.S. 2-Step

PB-300
S.S. 3-Step

PB-301
S.S.

PB-302
S.S. Lining

PB-303
S.S. Lining

PB-304
S.S. Lining

PB-305
S.S. 4-Line

PB-306
S.S. 3-Line

PB-307
S.S. 2-Tone

PB-308
S.S. 6-Line

PB-309
S.S. Lining

PB-310
S.S. 2-Tone

A Symphony of Design, Dimension, Beauty & Perfection All Type of Bathroom Accessories

Charly Series

304 stainless steel

Towel Rack (C-601)
Size Available 18" & 24"

Towel Rack (C-602)
Size Available 18" & 24"

Soap Dish (C-603)

Double Towel Rack (C-614)
Size Available 18" & 24"

Napkin Ring (C-604)

Tumble Holder (C-607)

Robe Hook (C-605)

Double Soap Dish (C-612)

Liquid Soap Dispenser (C-606)

Paper Holder with Lid (C-609)

Soap Dish with Tumbler Holder (C-613)

Jelly Series

304 stainless steel with brass

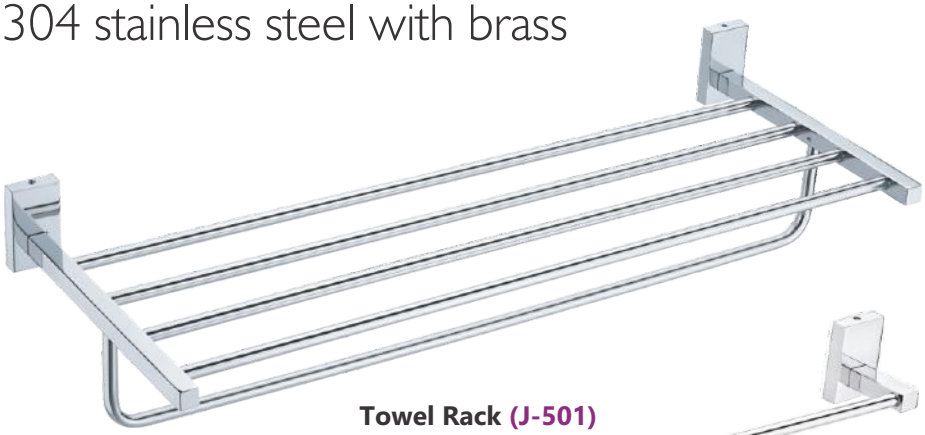

Towel Rack (J-501)
Size Available 18" & 24"

Napkin Ring (J-504)

Towel Rod (J-502)
Size Available 18" & 24"

Soap Dish (J-503)

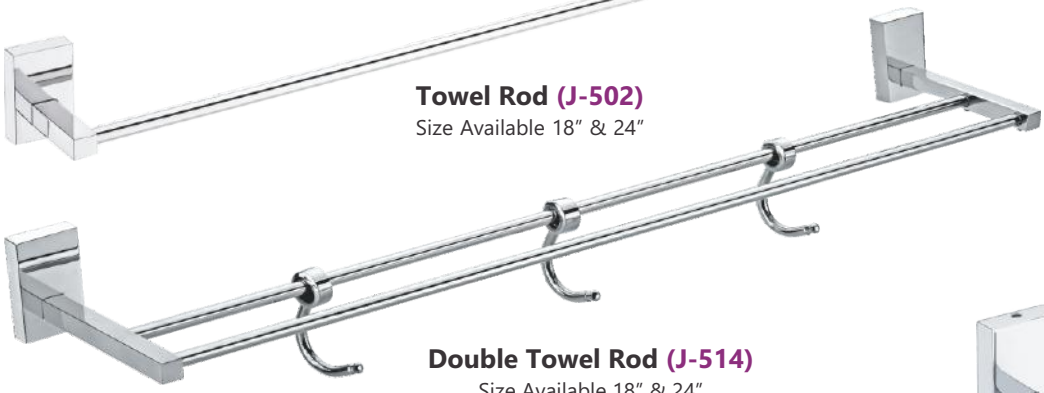

Double Towel Rod (J-514)
Size Available 18" & 24"

Robe Hook (J-505)

Glass Self (J-516)
Size Available 6"x12", 6"x18"

Tumble Holder (J-507)

Double Soap Dish (J-512)

Liquid Soap Dispenser (J-506)

Soap Dish with Liquid Holder (J-515)

Paper Holder with Lid (J-509)

Soap Dish with Tumbler Holder (J-513)

Angel Series

304 stainless steel

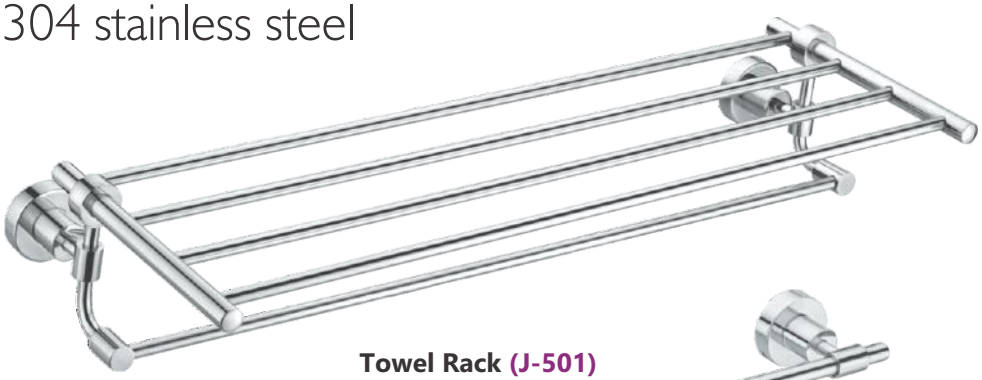

Towel Rack (J-501)
Size Available 18" & 24"

Napkin Ring (J-504)

Towel Rod (J-502)
Size Available 18" & 24"

Soap Dish (J-503)

Double Towel Rod (J-514)
Size Available 18" & 24"

Tumble Holder (J-507)

Robe Hook (J-505)

Double Soap Dish (J-512)

Liquid Soap Dispenser (J-506)

Paper Holder with Lid (J-509)

Soap Dish with Tumbler Holder (J-513)

Ocean Series

304 stainless steel

Towel Rack (O-701)
Size Available 18" & 24"

Napkin Ring (O-704)

Towel Rod (O-702)
Size Available 18" & 24"

Soap Dish (O-703)

Double Towel Rod (O-714)
Size Available 18" & 24"

Double Soap Dish (O-712)

Robe Hook (O-705)

Tumble Holder (O-707)

Liquid Soap Dispenser (O-706)

Paper Holder with Lid (O-709)

Soap Dish with Liquid Holder (O-715)

Soap Dish with Tumbler Holder (O-713)

Shine Series

304 stainless steel

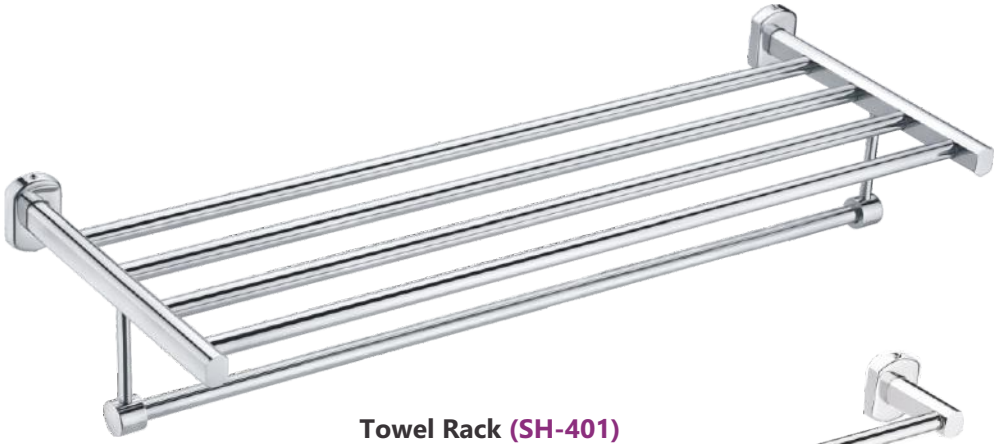

Towel Rack (SH-401)
Size Available 18" & 24"

Napkin Ring (SH-404)

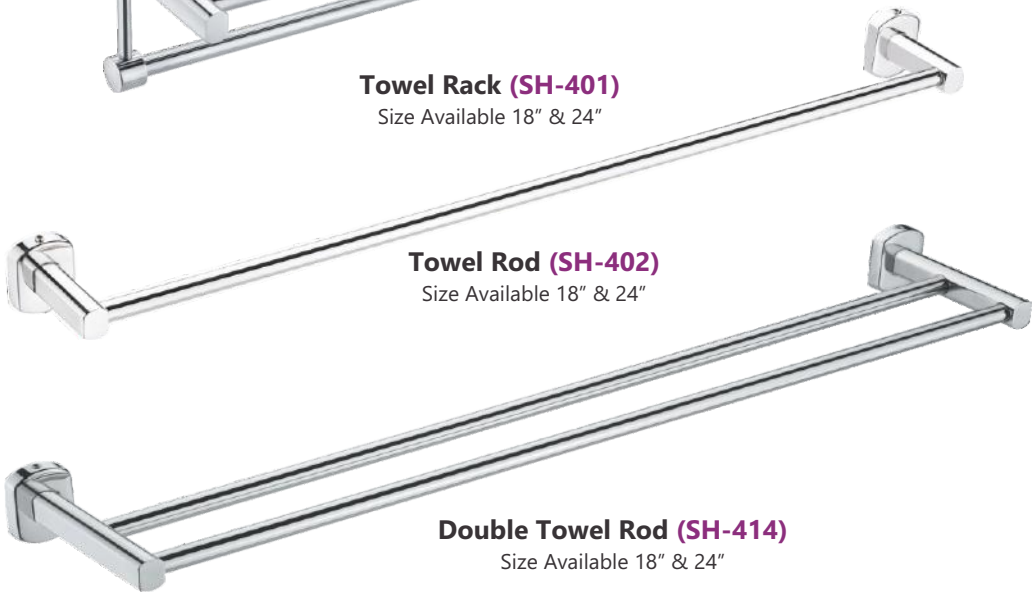

Towel Rod (SH-402)
Size Available 18" & 24"

Double Towel Rod (SH-414)
Size Available 18" & 24"

Soap Dish (SH-403)

Double Soap Dish (SH-412)

Robe Hook (SH-405)

Tumble Holder (SH-407)

Liquid Soap Dispenser (SH-406)

Paper Holder with Lid (SH-409)

Soap Dish with Tumbler Holder (SH-413)

Star Series

304 stainless steel

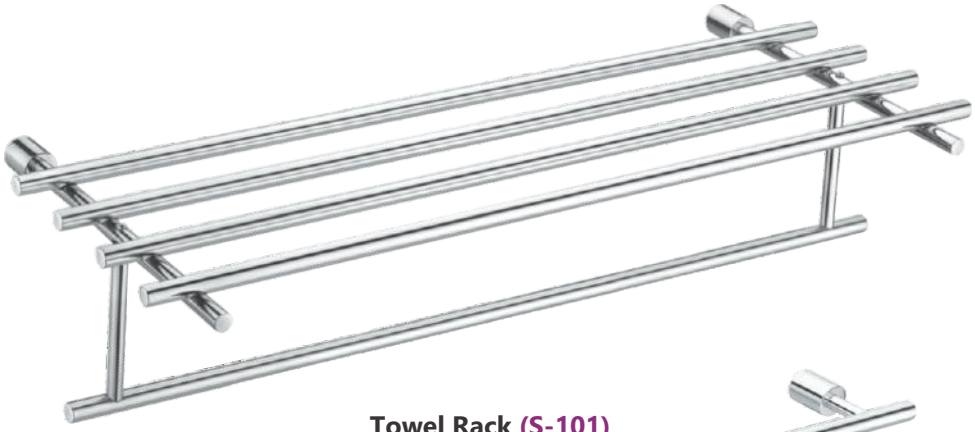

Towel Rack (S-101)
Size Available 18" & 24"

Napkin Ring (S-104)

Towel Rod (S-102)
Size Available 18" & 24"

Soap Dish (S-103)

Double Towel Rod (S-114)
Size Available 18" & 24"

Double Soap Dish (S-112)

Robe Hook (S-105)

Tumble Holder (S-107)

Liquid Soap Dispenser (S-106)

Paper Holder with Lid (S-109)

Soap Dish with Tumbler Holder (S-113)

Blue Series

304 stainless steel

Towel Rack (B-301)
Size Available 18" & 24"

Napkin Ring (B-304)

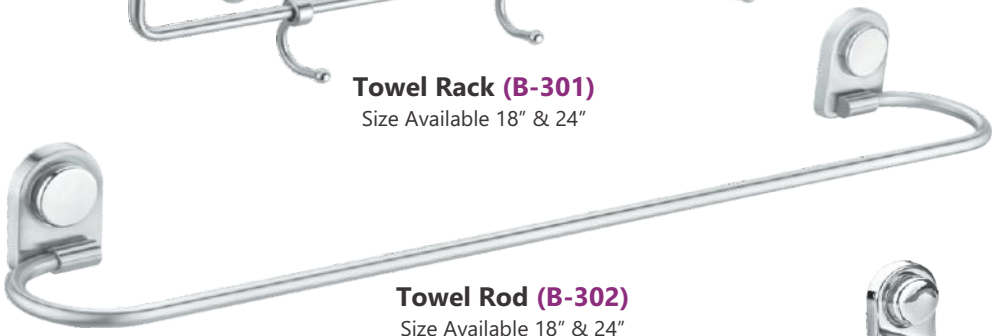

Towel Rod (B-302)
Size Available 18" & 24"

Soap Dish (B-303)

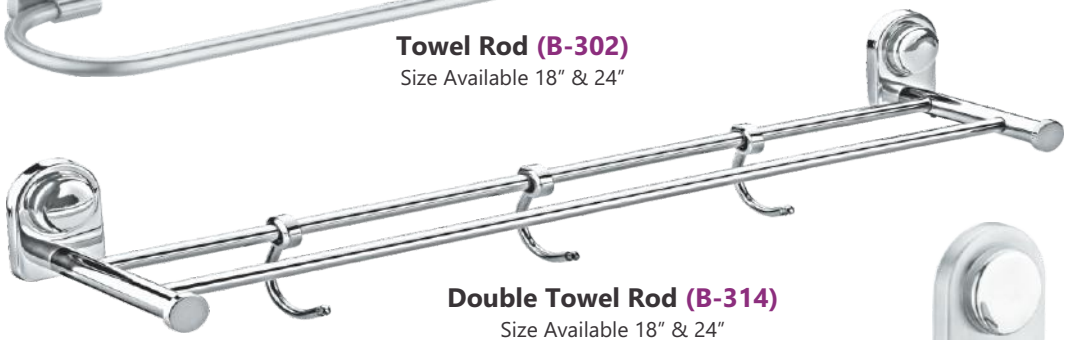

Double Towel Rod (B-314)
Size Available 18" & 24"

Robe Hook (B-305)

Glass Self (B-316)
Size Available 6"x12", 6"x18"

Double Soap Dish (B-312)

Tumble Holder (B-307)

Liquid Soap Dispenser (B-306)

Paper Holder with Lid (B-309)

Soap Dish with Tumbler Holder (B-313)

Jack Series

304 stainless steel

Steet Self (AQ-2001)
Size Available
5″ x 12″ | 5″ x 15″ | 5″ x 18″

Glass Self (AQ-2002)
Size Available
6″ x 12″ | 6″ x 18″

Acrylic Self (AQ-2003)
Size Available
6″ x 12″ | 6″ x 15″ | 6″ x 18″

Thickness Available
8mm | 6mm

Acrylic Corner (AQ-2009)
Size Available
8″ x 8″ | 9″ x 9″ | 10″ x 10″ | 12″ x 12″

Thickness Available
8mm | 6mm

Glass Corner (AQ-2008)
Size Available
8″ x 8″ | 9″ x 9″ | 10″ x 10″ | 12″ x 12″

Rock Series

304 stainless steel

Steet Self (AQ-2004)
Size Available
5″ x 12″ | 5″ x 15″ | 5″ x 18″

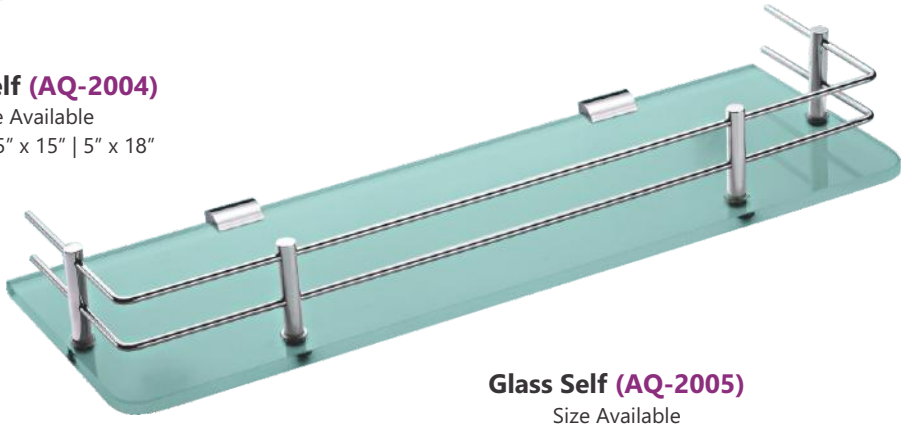

Glass Self (AQ-2005)
Size Available
6″ x 12″ | 6″ x 18″

Acrylic Self (AQ-2006)
Size Available
6″ x 12″ | 6″ x 15″ | 6″ x 18″

Thickness Available
8mm | 6mm

Acrylic Corner (AQ-2012)
Size Available
8″ x 8″ | 9″ x 9″ | 10″ x 10″ | 12″ x 12″

Thickness Available
8mm | 6mm

Glass Corner (AQ-2011)
Size Available
8″ x 8″ | 9″ x 9″ | 10″ x 10″ | 12″ x 12″

Desire

304 stainless steel

Towel Rack With Rod (D-101)
Size Available 18" & 24"

Towel Rod (D-102)
Size Available 18" & 24"

Robe Hook (D-105)

Napkin Ring (D-104)

Soap Dish (D-103)

Multi Purpose Pole (D-108)

Tumble Holder (D-106)

Soap Dish with Tumbler Holder (D-107)

Sapphire

304 stainless steel

Towel Rack With Rod (SA-201)
Size Available 18″ & 24″

Towel Rod (SA-202)
Size Available 18″ & 24″

Tumble Holder (SA-206)

Napkin Ring (SA-204)

Soap Dish (SA-203)

Robe Hook (SA-205)

Soap Dish with Tumbler Holder (SA-207)

Double Soap Dish (SA-208)

Emperor

304 stainless steel

Towel Rack With Rod (E-101)
Size Available 18" & 24"

Towel Rod (E-102)
Size Available 18" & 24"

Robe Hook (E-104)

Napkin Ring (E-103)

Tumble Holder (E-107)

Soap Dish (E-106)

Bath Fittings

304 stainless steel

Towel Rack With Rod (BF-101)

Towel Rack With Rod (BF-102)

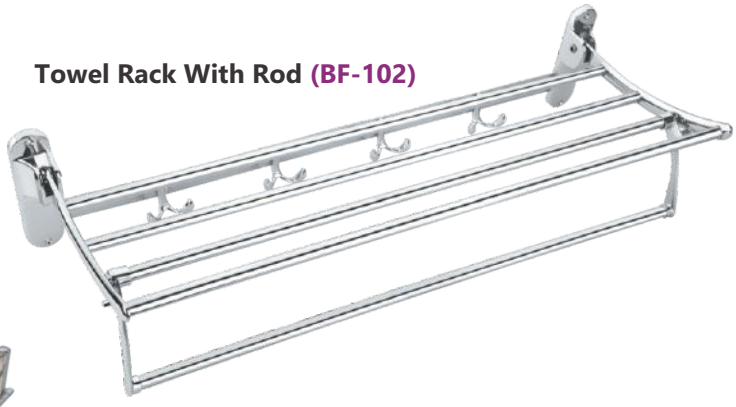

Bathroom Corner (BF-103)

Bathroom Corner (BF-104)

Bathroom Corner (BF-105)

Bathroom Corner (BF-106)

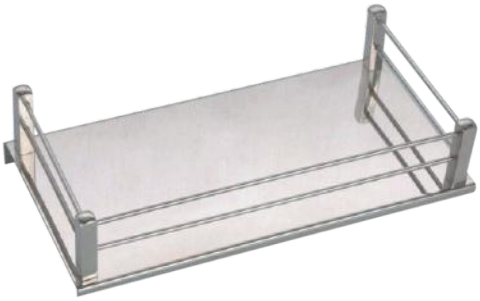

Double Soap Dish (BF-107)

Soap Dish With Tumble Holder (BF-108)

Double Soap Dish (BF-109)

Soap Dish With Tumble Holder (BF-110)

Multi Purpose (BF-111)

(BF-113)

(BF-114)

(BF-115)

(BF-116)

(BF-117)

(BF-118)

Multi Purpose Pole (D-112)

Sink (S-1001)

Sink (S-1002)

Sink (S-1003)

Sink (S-1004)

Sink (S-1005)

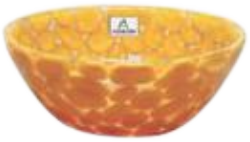

Sink (S-1006)

Sink (S-1007)

Sink (S-1008)

Sink (S-1009)

Sink (S-1010)

Sink (S-1011)

Sink (S-1012)

Sink (S-1013)

Sink (S-1014)

Sink (S-1015)

Sink (S-1016)

Sink (S-1017)

Sink (S-1018)

Sink (S-1019)

Sink (S-1020)

Sink (S-1021)

Sink (S-1022)

Sink (S-1023)

Sink (S-1024)

Sink (S-1025)

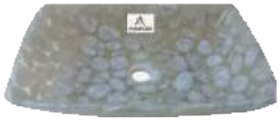

Sink (S-1026)

Sink (S-1027)

Sink (S-1028)

Sink (S-1029)

Sink (S-1030)

Sink (S-1031)

Sink (S-1032)

Sink (S-1033)

Sink (S-1034)

Sink (S-1035)

Sink (S-1036)

Sink (S-1037)

Sink (S-1038)

Sink (S-1039)

Sink (S-1040)

Sink (S-1041)

Sink (S-1042)

Sink (S-1043)

Sink (S-1044)

Sink (S-1045)

Sink (S-1046)

Sink (S-1047)

Sink (S-1048)

Sink (S-1049)

Sink (S-1050)

Sink (S-1051)

Sink (S-1052)

Sink (S-1053)

Sink (S-1054)

Sink (S-1055)

Sink (S-1056)

Sink (S-1057)

Sink (S-1058)

Sink (S-1059)

Sink (S-1060)

Exquisite Hardware Products & Fittings..