All Type of Architectural Hardware & Fittings

DHRUV®
INTERIOR ORNAMENTS

Kastury®

Stainless Steel 202, 304, 316, Brass, Zink & Aluminum

No. 2001

No. 2002

No. 2003

No. 2004

Mo. Marshal

Mo. Mattka

Mo. Flower

Mo.Apple

Mo. Rajwadi

Mo. King

Mo. Queen

Mo.Trishul

Mo. C type

Mo. Jorjan

Mo. Sparrow

Mo. Silver Line

Mo. Middle Stump

Mo. Cross Cut

Mo. 20-20

Size : 8”/ 10”/12”/14”.....
Rod :12mm/14mm/16mm/19mm
Sheet Size : (S.S.)1.8mm/2mm/2.5mm/3mm
4mm/5mm & I.C.

Mo. : Rajwadi

Mo. : Spiro

Mo. : Marshal

Mo. : Wawe

Mo. : Flower

Mo. : Fish

Size : 8”/ 10”/12”/14”.....
Rod :12mm/14mm/16mm/19mm
Sheet Size : (S.S.)1.8mm/2mm/2.5mm/3mm
4mm/5mm & I.C.

Mo. : Apple

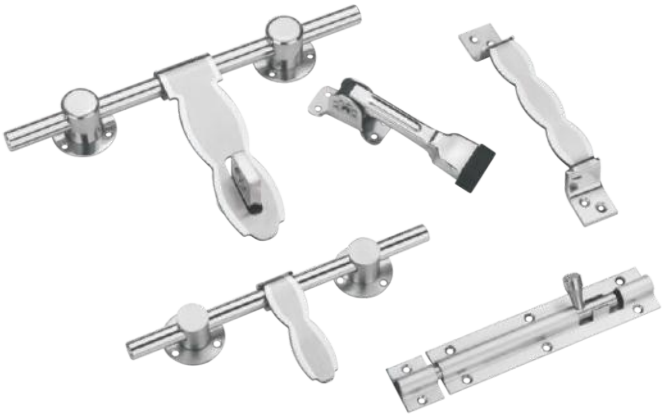

Mo. : Maharaja

Mo. : Queen

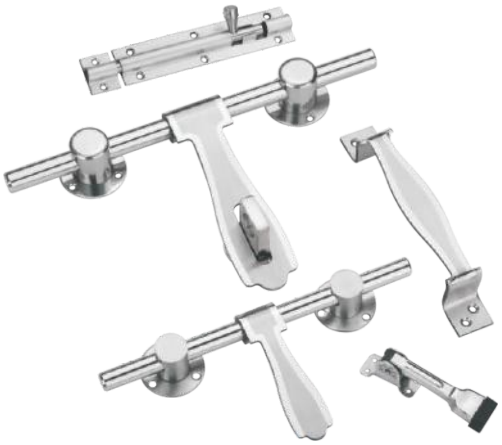

Mo. : Slide

Mo. : Live

Mo. : Royel Matka

Size : 8”/ 10”/12”/14”.....
Rod :12mm/14mm/16mm/19mm
Sheet Size : (S.S.)1.8mm/2mm/2.5mm/3mm
4mm/5mm & I.C.

Mo. : King

Mo. : Sun-shine

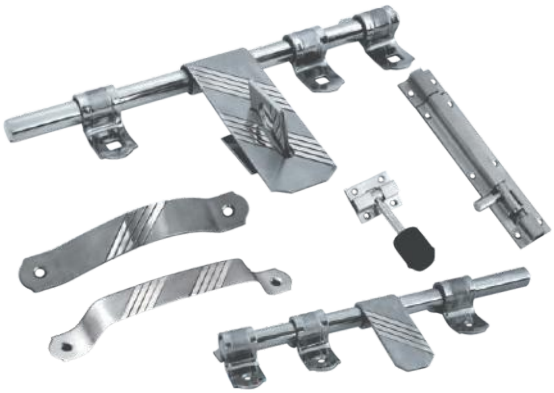

Mo. : Damru

Mo. : S

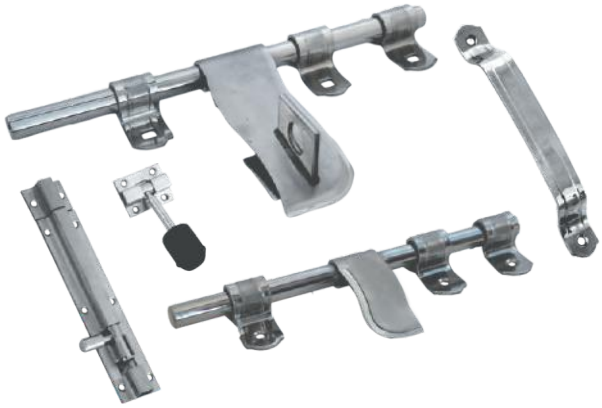

Mo. : Mandir

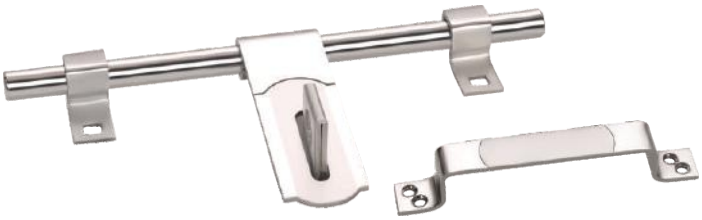

Mo. : Anchor

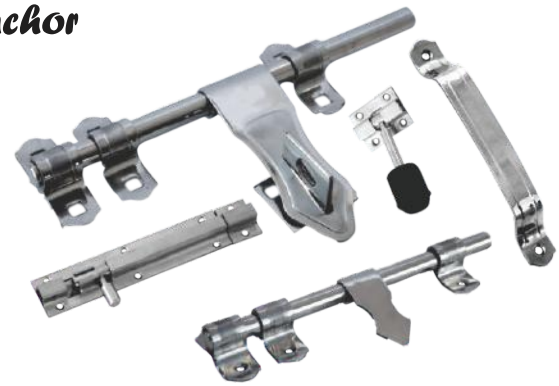

Size : 8”/ 10”/12”/14”.....
Rod :12mm/14mm/16mm/19mm
Sheet Size : (S.S.)1.8mm/2mm/2.5mm/3mm
4mm/5mm & I.C.

Mo. : Bullet

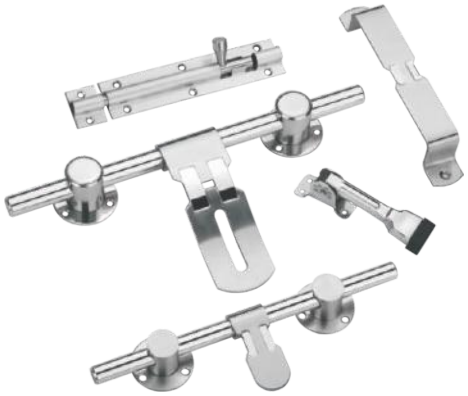

Mo. : Rose

Mo. : Oddi

Mo. : C-Dot

Mo. : Sliver Line

Mo. : C-type

Size : 8”/ 10”/12”/14”.....
Rod :12mm/14mm/16mm/19mm
Sheet Size : (S.S.)1.8mm/2mm/2.5mm/3mm
4mm/5mm & I.C.

Mo. : 3G

Mo. : Tiranga Dot

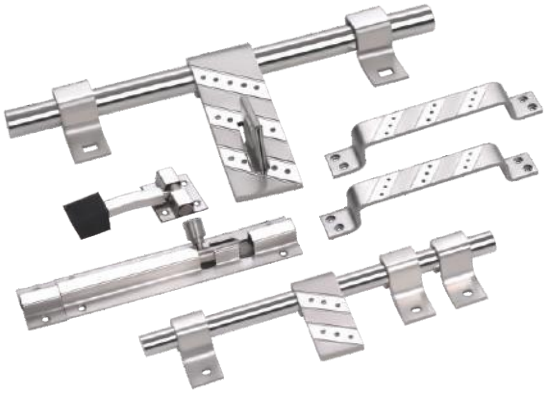

Mo. : Tiranga

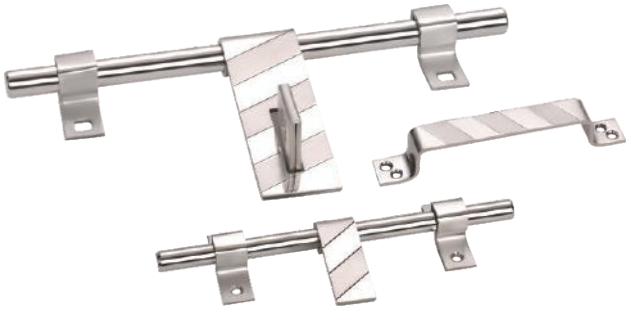

Mo. : C.D. Dot

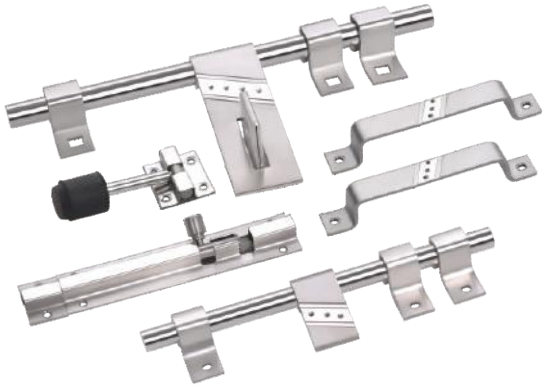

Mo. : i-20

Size : 8”/ 10”/12”/14”.....
Rod :12mm/14mm/16mm/19mm
Sheet Size : (S.S.)1.8mm/2mm/2.5mm/3mm
4mm/5mm & I.C.

Mo. : Sun-Moon Gattu

Mo. : Slide

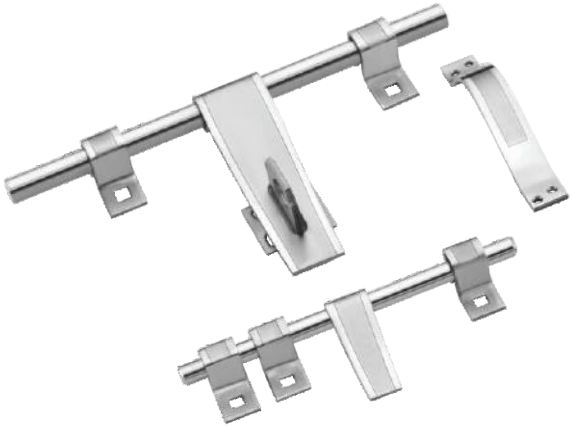

Mo. : Sun-Moon Premium

Mo. : Mango

Mo. : Sent innova

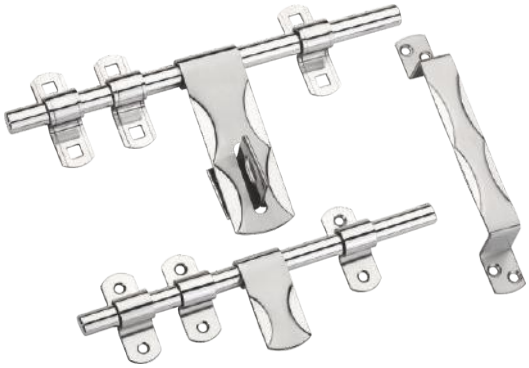

Mo. : C-Cut Dot

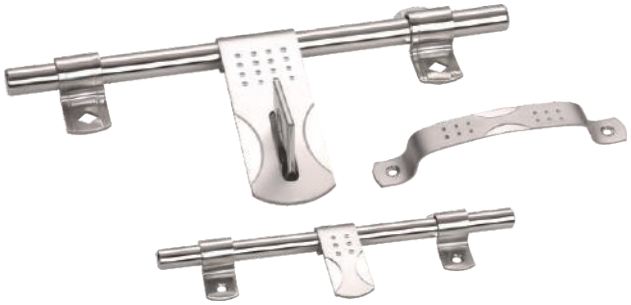

Size : 8”/ 10”/12”/14”.....
Rod :12mm/14mm/16mm/19mm
Sheet Size : (S.S.)1.8mm/2mm/2.5mm/3mm
4mm/5mm & I.C.

Mo.: Laher Gattu

Mo.: 20-20 Gattu

Mo.: Laher Premium

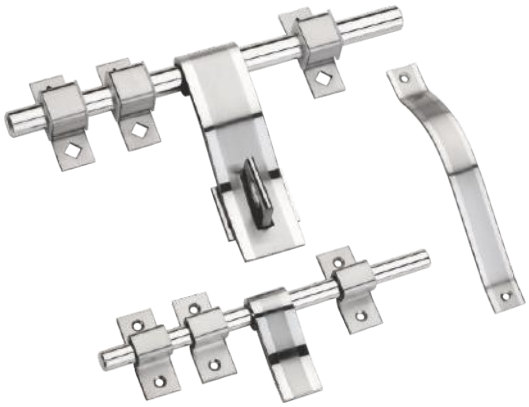

Mo.: 20-20 Premium

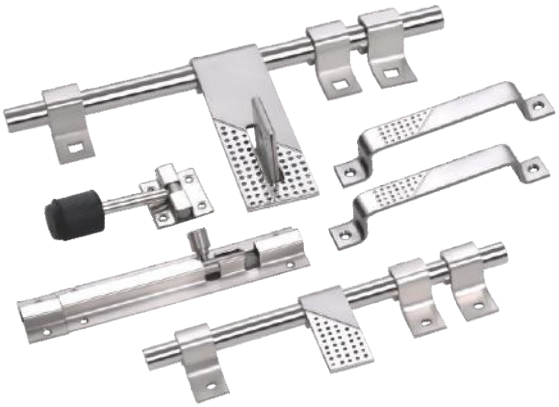

Mo.: Laher Regular

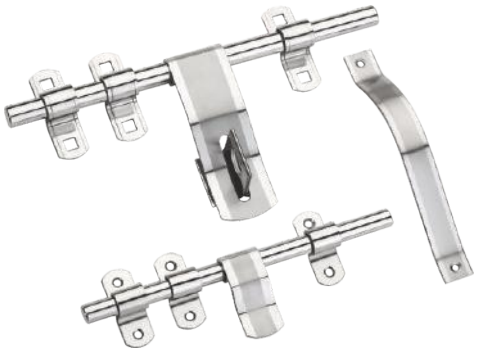

Mo.: 20-20 Regular

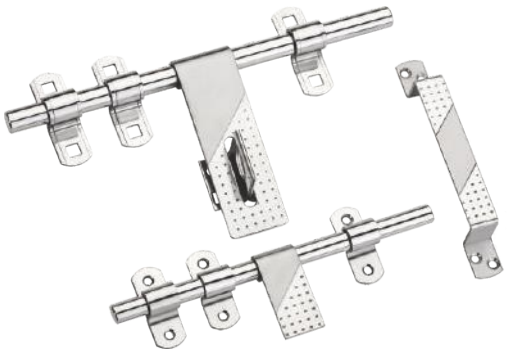

Size : 8”/ 10”/12”/14”.....
Rod :12mm/14mm/16mm/19mm
Sheet Size : (S.S.)1.8mm/2mm/2.5mm/3mm
4mm/5mm & I.C.

Mo.: Zibra Gattu

Mo.: Cadbury Gattu

Mo.: Zibra Premium

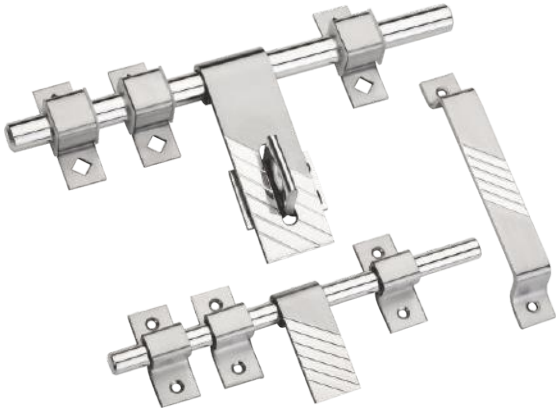

Mo.: Cadbury Premium

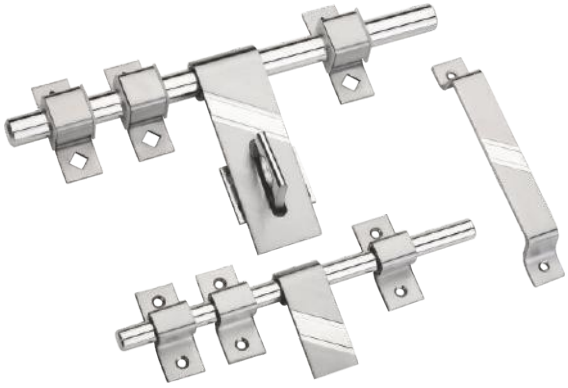

Mo.: Zibra Regular

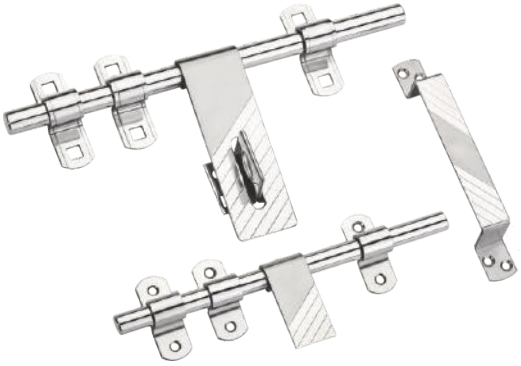

Mo.: Cadbury Regular

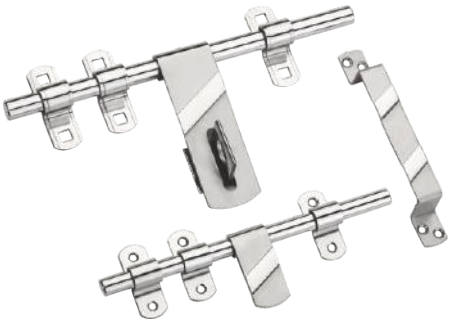

Size : 8”/ 10”/12”/14”.....
Rod :12mm/14mm/16mm/19mm
Sheet Size : (S.S.)1.8mm/2mm/2.5mm/3mm
4mm/5mm & I.C.

Mo.: ipl Gattu

Mo.: Middle Stump Gattu

Mo.: ipl Premium

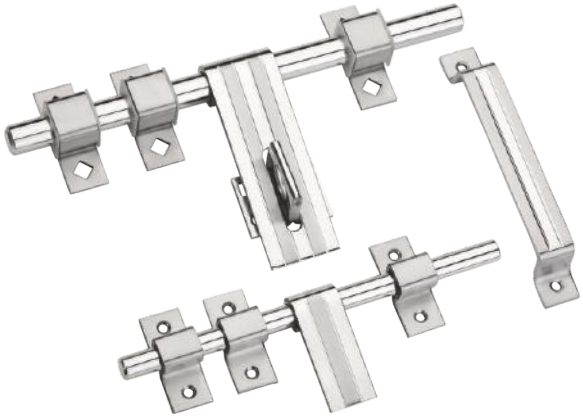

Mo.: M.S.P. Premium

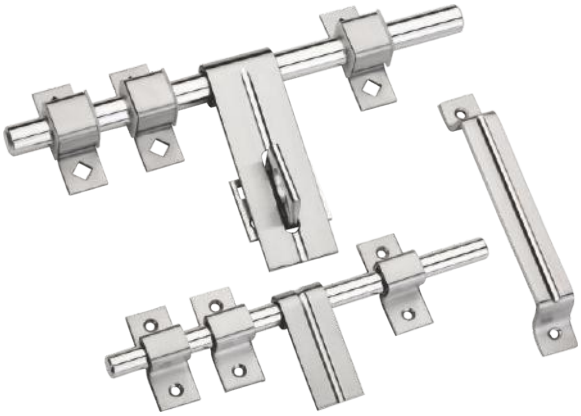

Mo.: ipl Regular

Mo.: M.S. Regular

Size : 8”/ 10”/12”/14”.....
Rod :12mm/14mm/16mm/19mm
Sheet Size : (S.S.)1.8mm/2mm/2.5mm/3mm
4mm/5mm & I.C.

No. : S-Type

No. : 2 Part

No. : Excellent

No. : Two Tone

No. : 50-50

No. : Side Line

Size : 8”/ 10”/12”/14”.....
Rod :12mm/14mm/16mm/19mm
Sheet Size : (S.S.)1.8mm/2mm/2.5mm/3mm
4mm/5mm & I.C.

Mo.: Glossy 2-tone

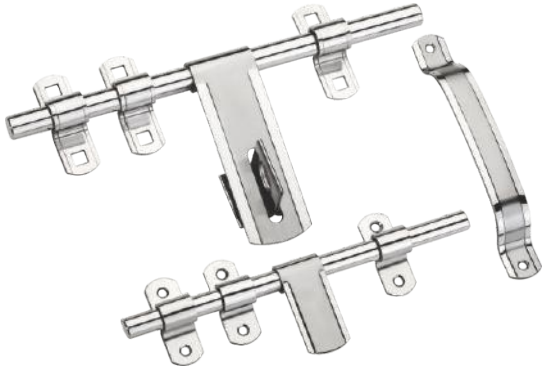

Mo.: Band Dot

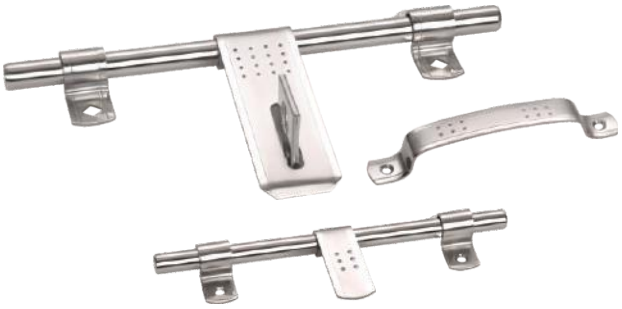

Mo.: Cadbury Dot

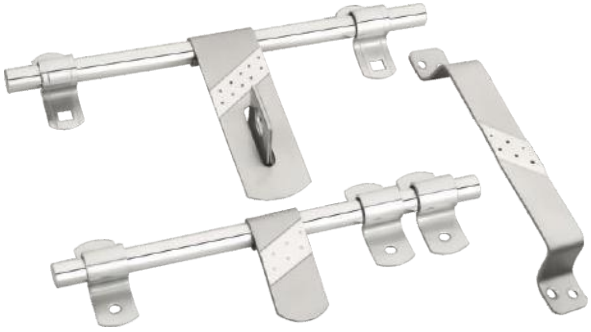

Mo.: Glossy

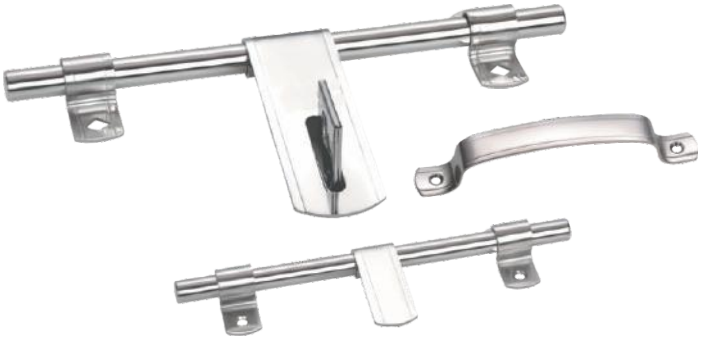

Mo.: Dot

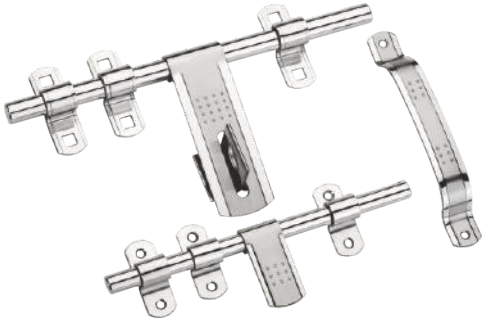

Mo.: Cross Cutte

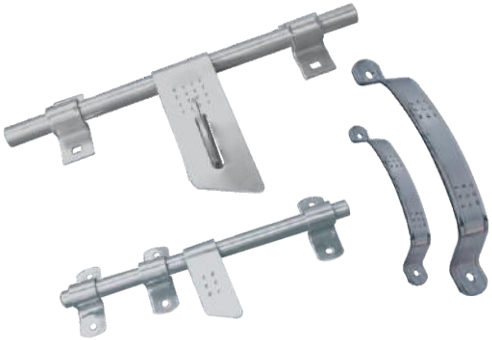

Size : 8”/ 10”/12”/14”.....
Rod :12mm/14mm/16mm/19mm
Sheet Size : (S.S.)1.8mm/2mm/2.5mm/3mm
4mm/5mm & I.C.

Mo. : 4-Square

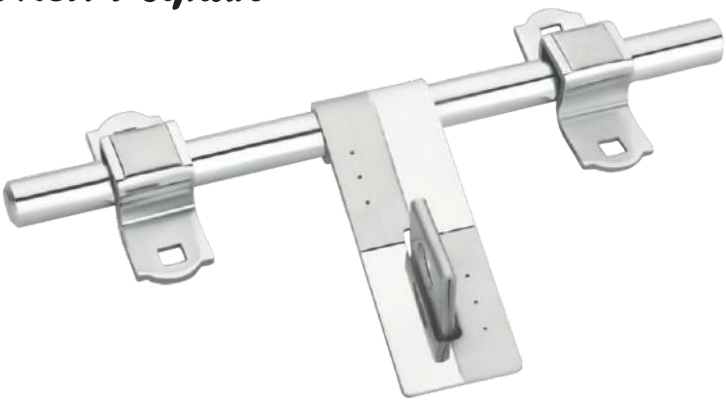

Mo. : 2-Way

Mo. : 4-Way

Mo. : Q-Sevan

Mo. : Jumbo Laher

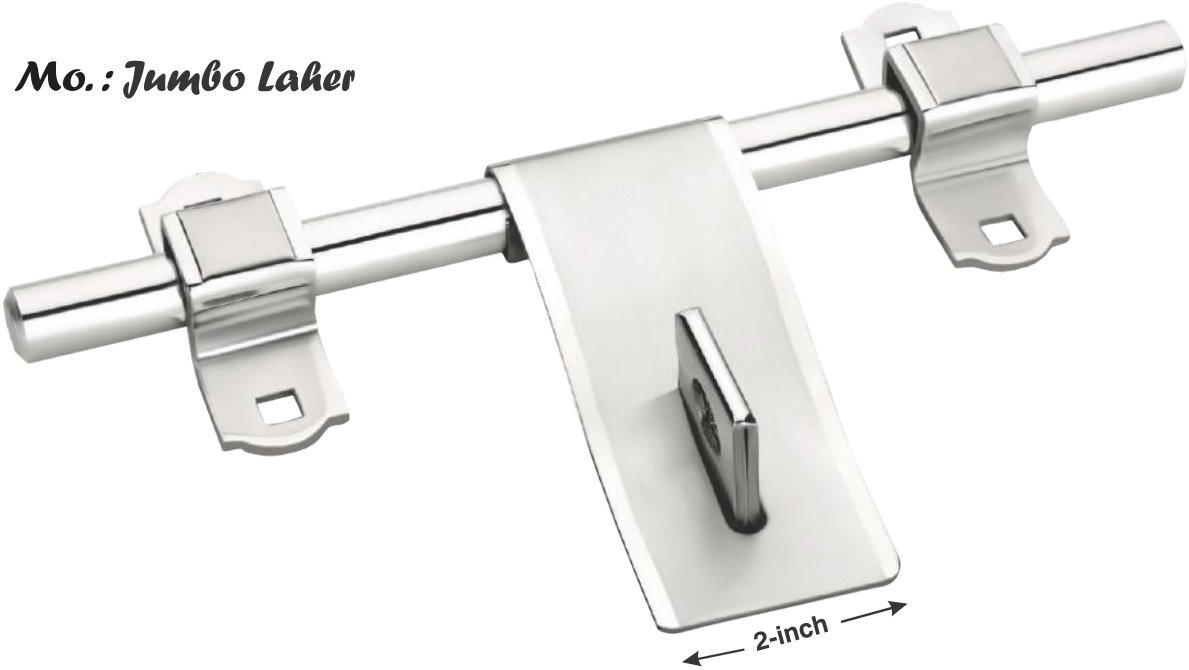

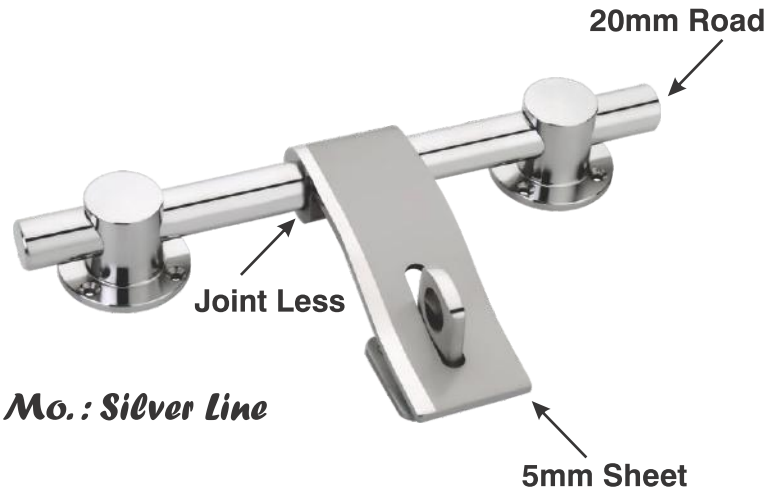

Mo.: Silver Line

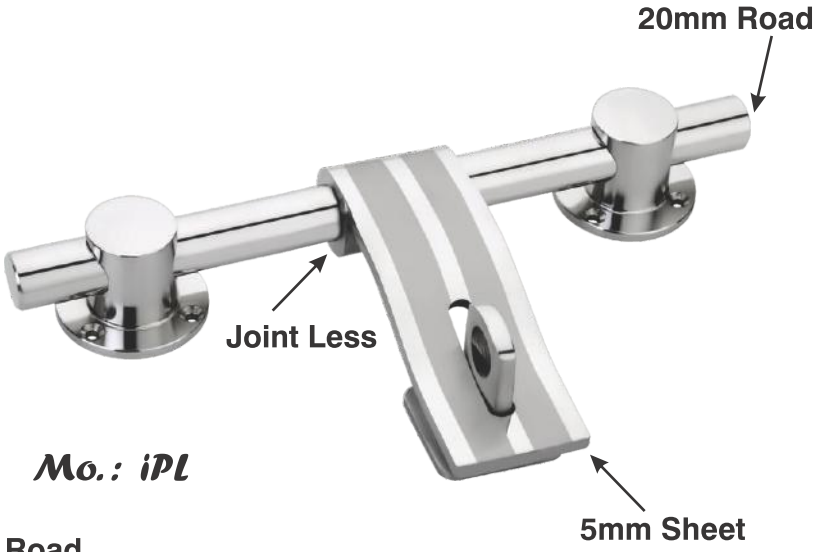

Mo.: iPL

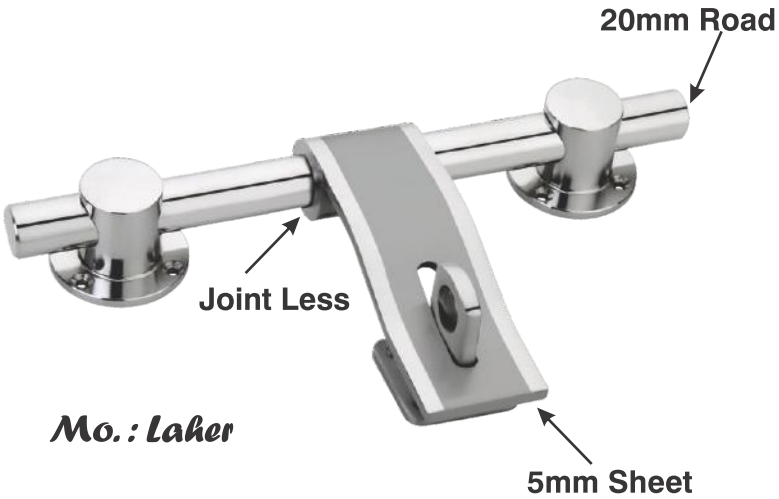

Mo.: Laher

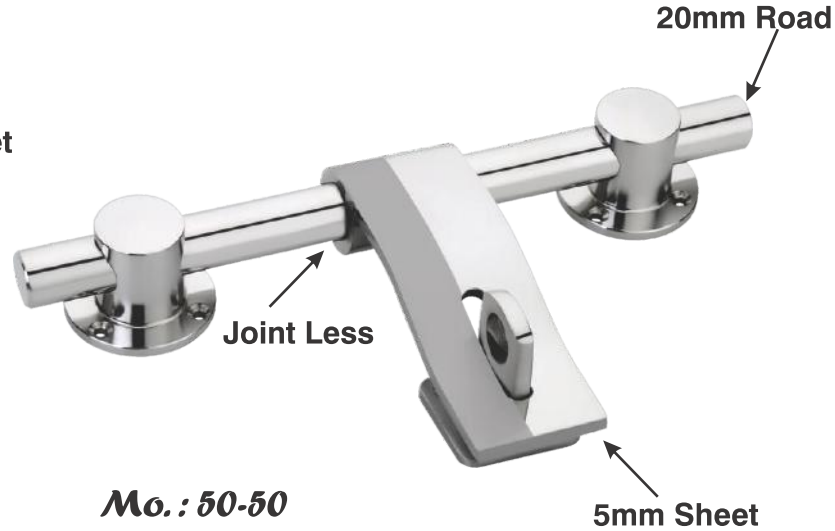

Mo.: 50-50

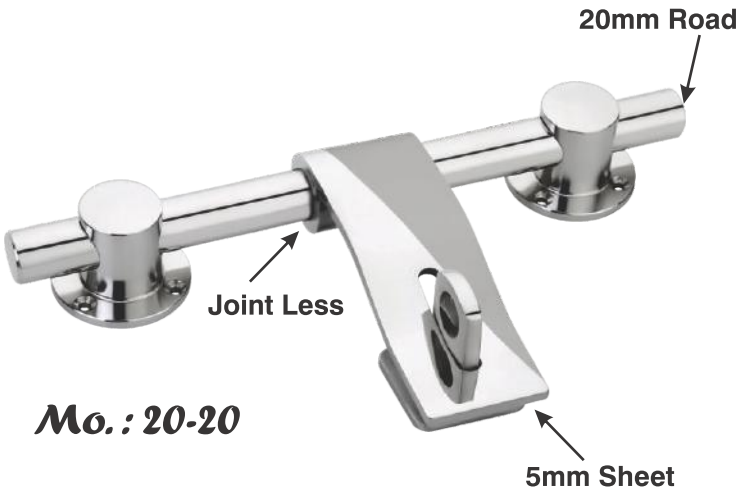

Mo. : 20-20

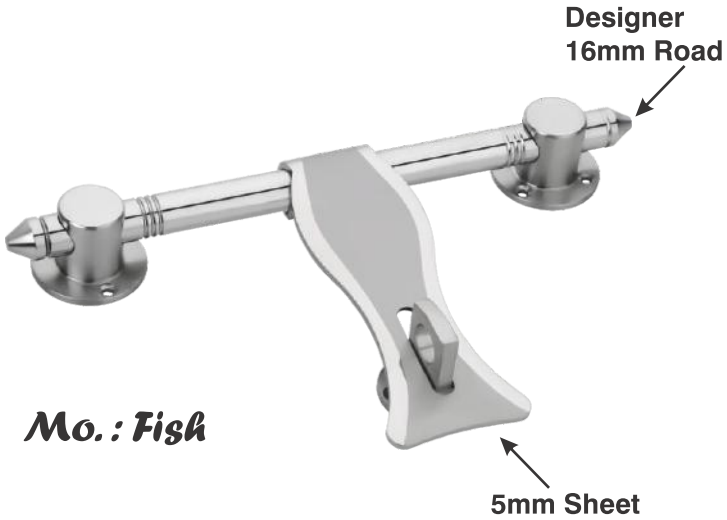

Mo. : Fish

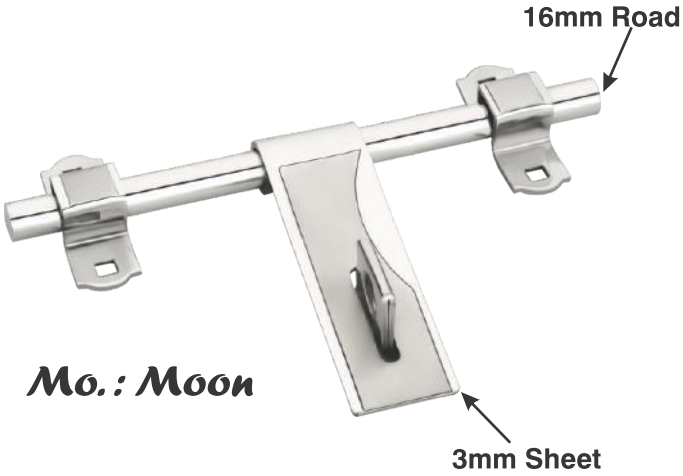

Mo. : Moon

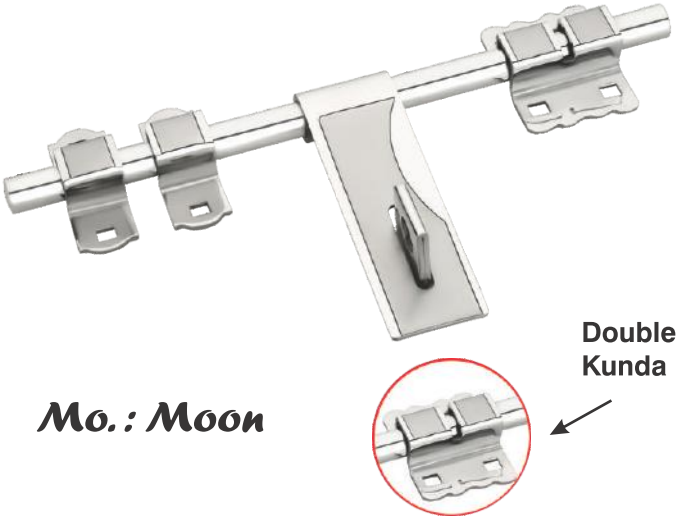

Mo. : Moon

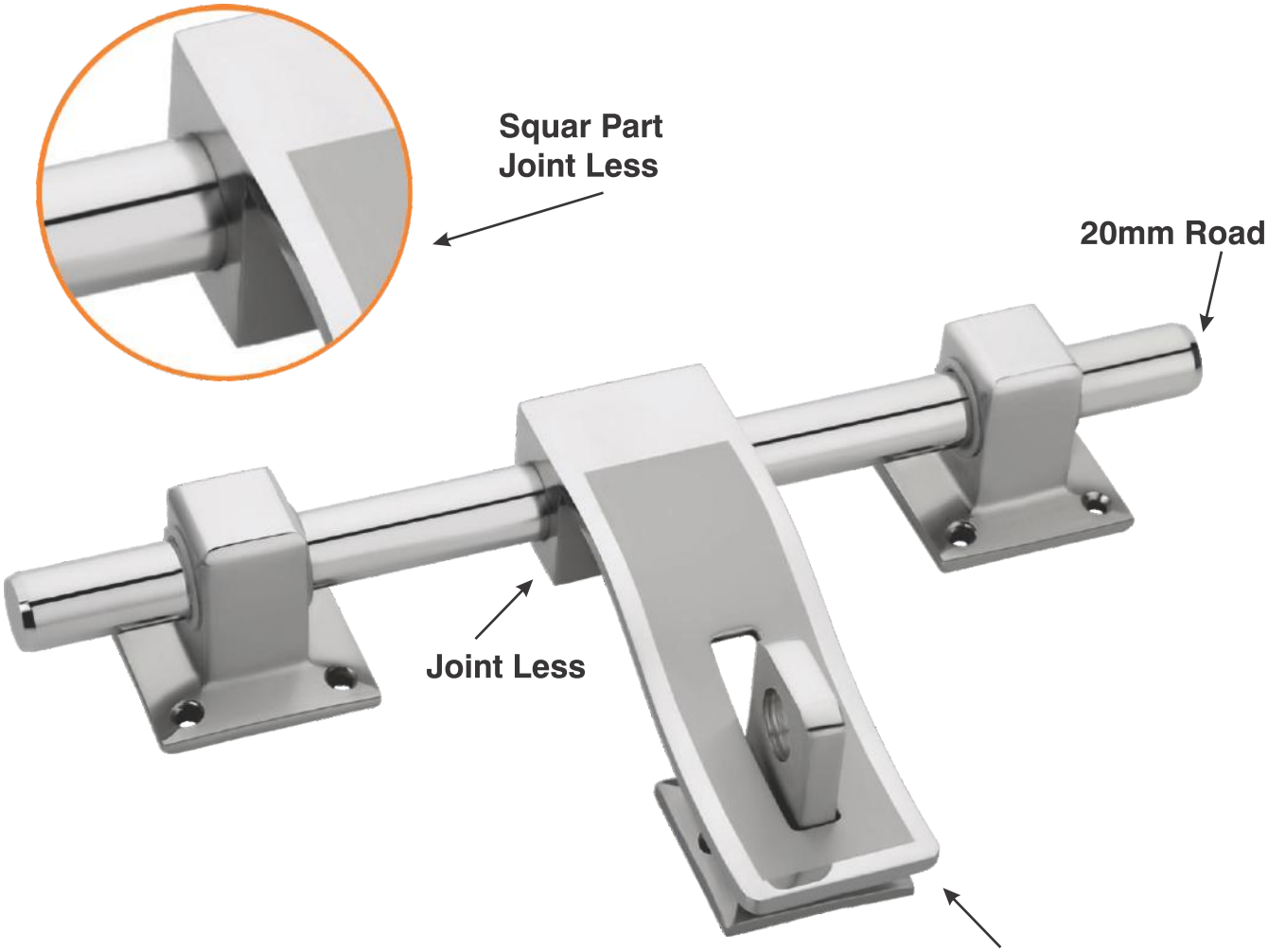

Slide Laher

More Design Available

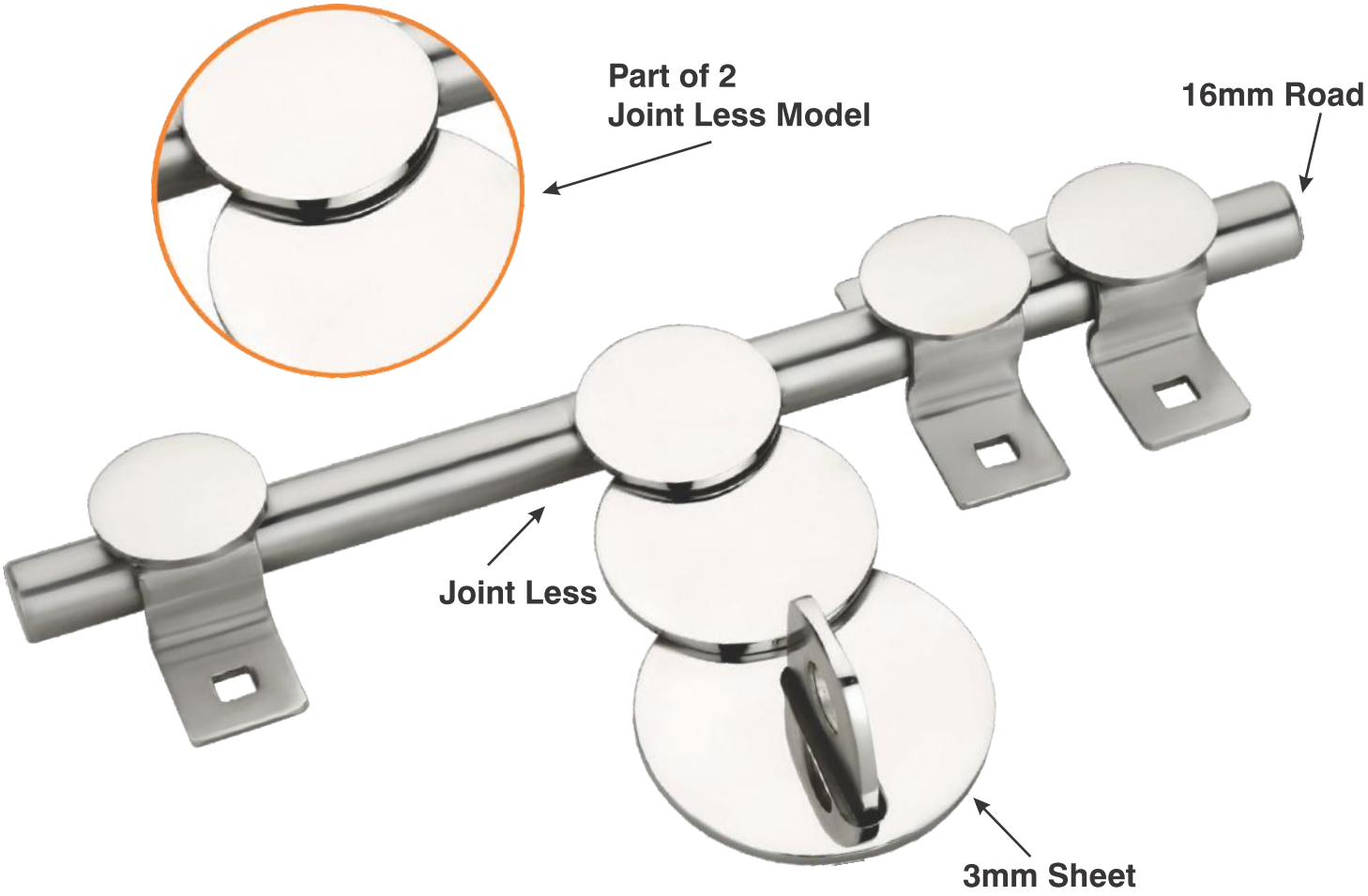

Galaxy

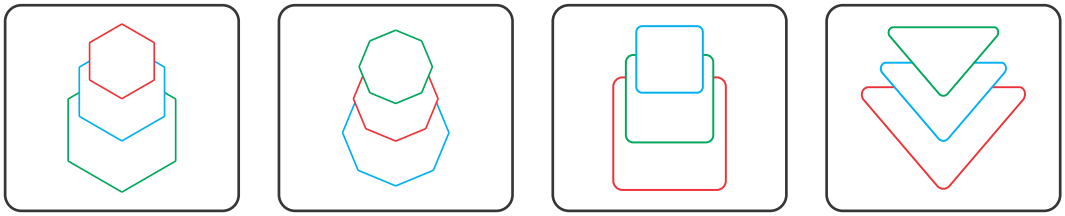

More Design Available

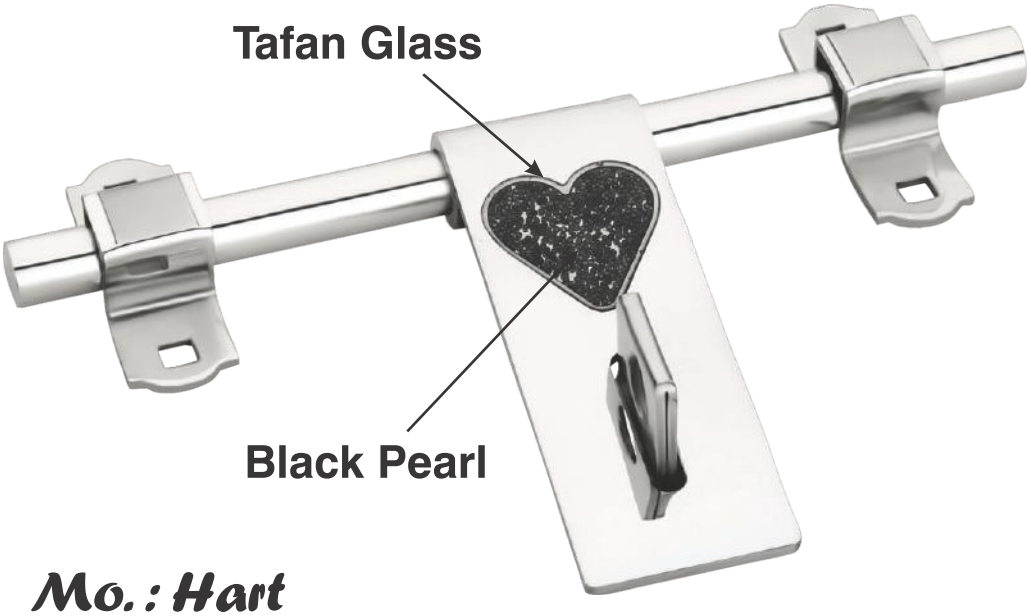

Mo. : Hart

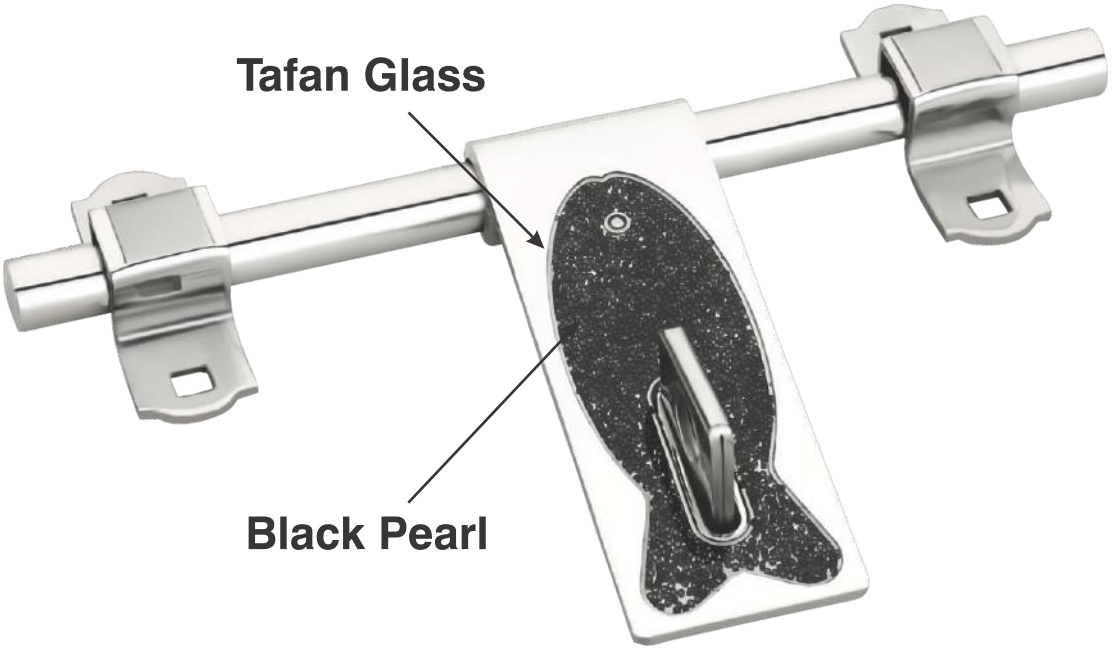

Mo. : Gold Fish

Size : 8”/ 10”/12”/14”.....
Rod :14mm/16mm
Sheet Size : (S.S.) 3mm/5mm

Mo. : 501

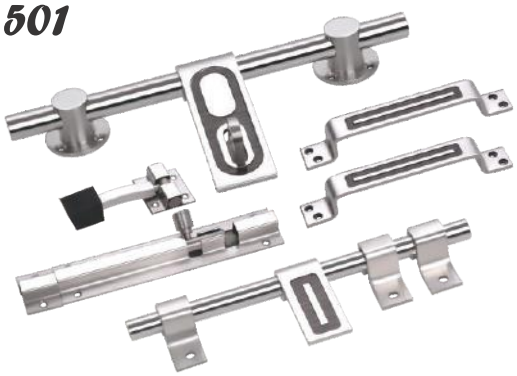

Mo. : 504

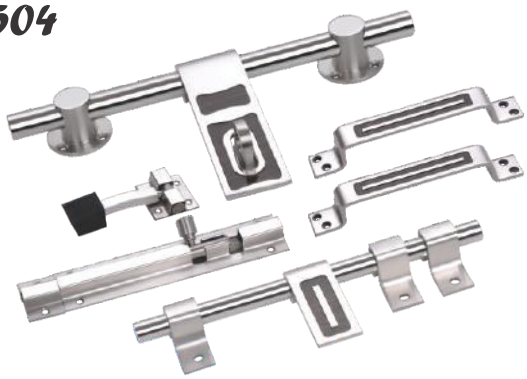

Mo. : 502

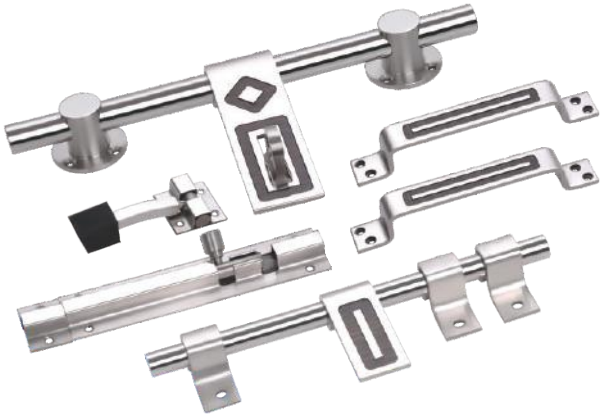

Mo. : 505

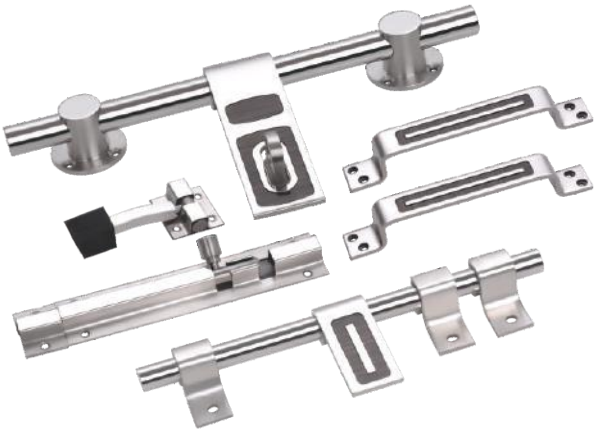

Mo. : 503

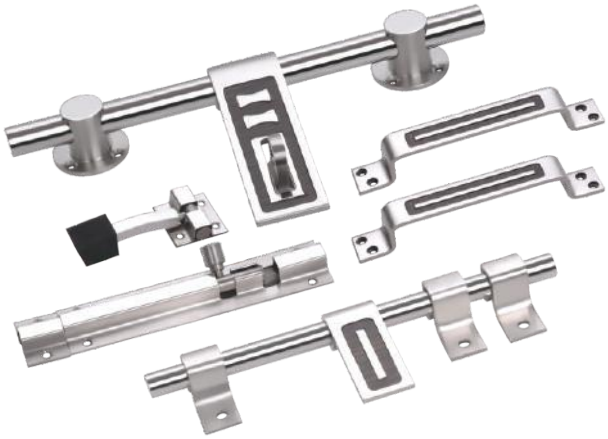

Mo. : 506

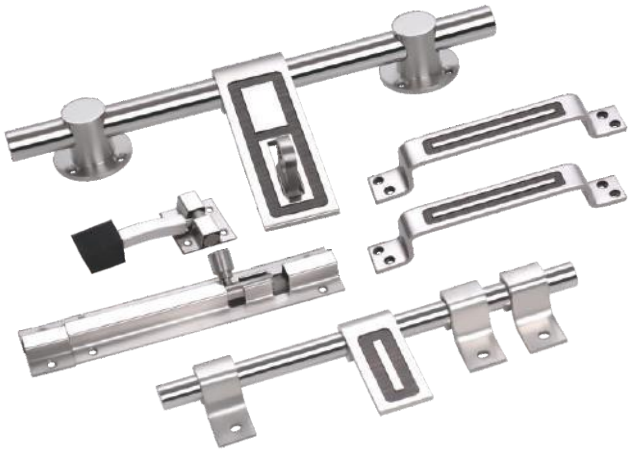

Size : 8”/ 10”/12”/14”.....
Rod :14mm/16mm
Sheet Size : (S.S.) 3mm/5mm

Mo. : 507

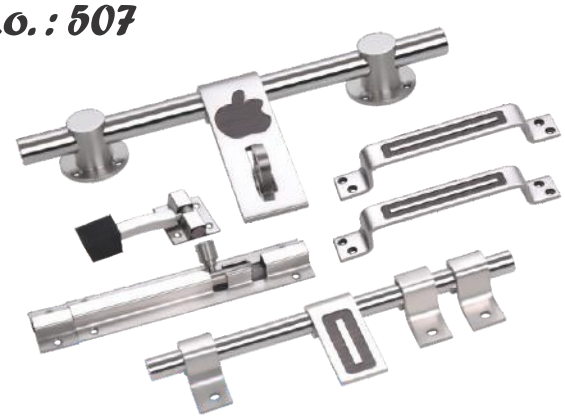

Mo. : 510

Mo. : 508

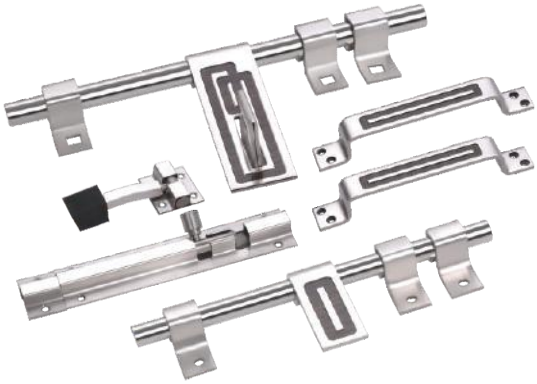

Mo. : 511

Mo. : 509

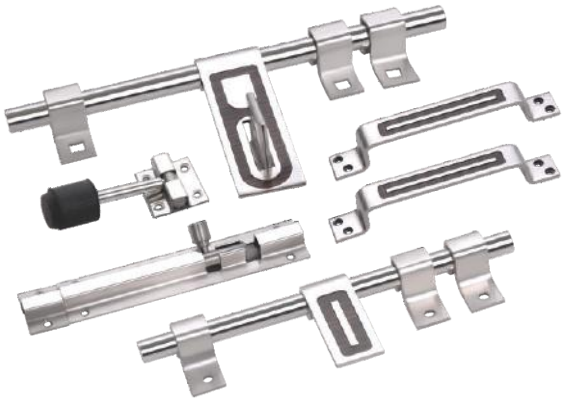

Mo. : 512

Size : 8”/ 10”/12”/14”.....
Rod :14mm/16mm
Sheet Size : (S.S.) 3mm/5mm

Mo. : 513

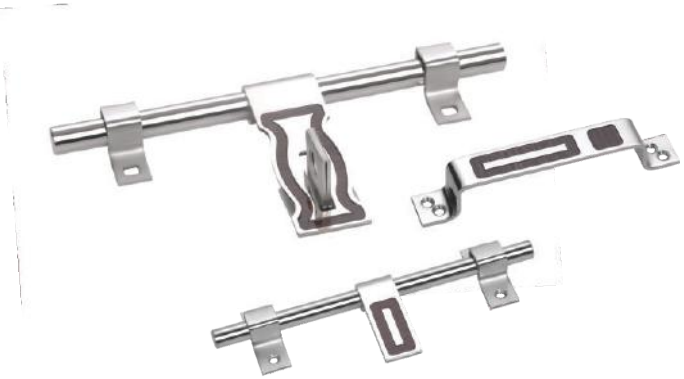

Mo. : 516

Mo. : 514

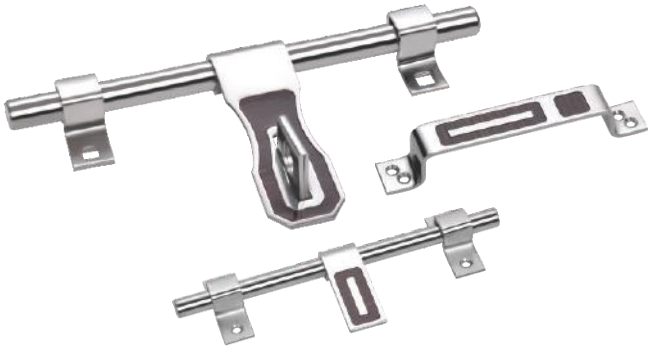

Mo. : 517

Mo. : 515

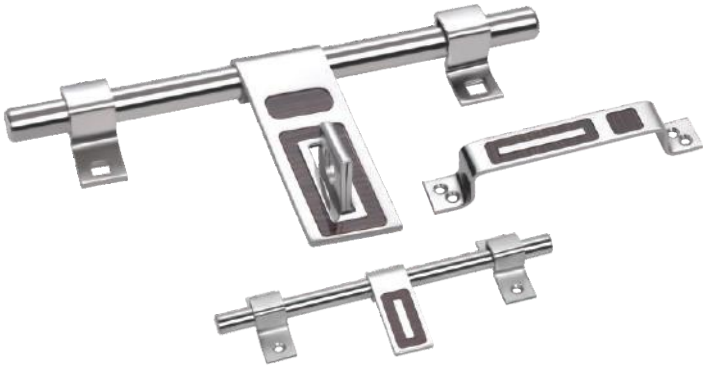

Mo. : 518

Size : 8”/ 10”/12”/14”.....
Rod :14mm/16mm
Sheet Size : (S.S.) 2mm/3mm/5mm

Mo. : 601

Mo. : 602

Size : 8”/ 10”/12”/14”.....
Rod :14mm/16mm
Sheet Size : (S.S.) 2mm/3mm/5mm

Mo. : 603

Mo. : 606

Mo. : 604

Mo. : 607

Mo. : 605

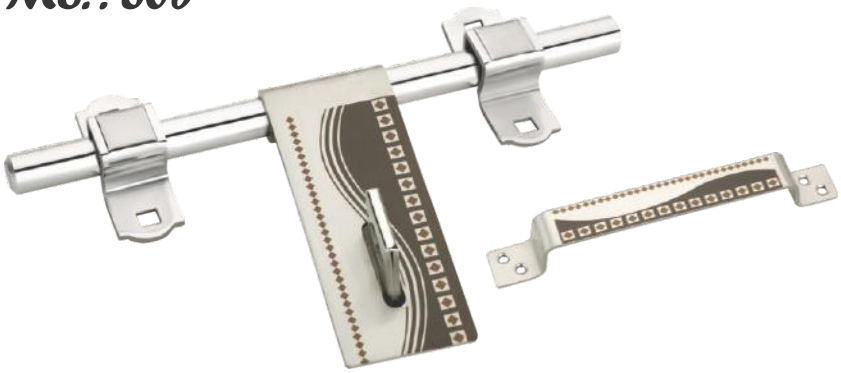

Size : 8”/ 10”/12”/14”.....
Rod :14mm/16mm
Sheet Size : (S.S.) 2mm/3mm/5mm

Mo.: 701

Mo.: 704

Mo.: 702

Mo.: 705

Mo.: 703

Mo.: 706

Size : 8”/ 10”/12”/14”.....
Rod :14mm/16mm
Sheet Size : (S.S.) 2mm/3mm/5mm

Mo. : 707

Mo. : 710

Mo. : 708

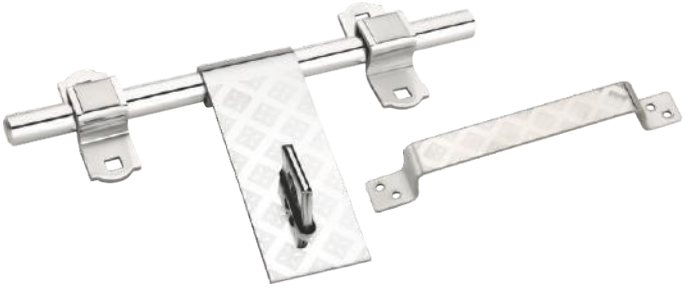

Mo. : 711

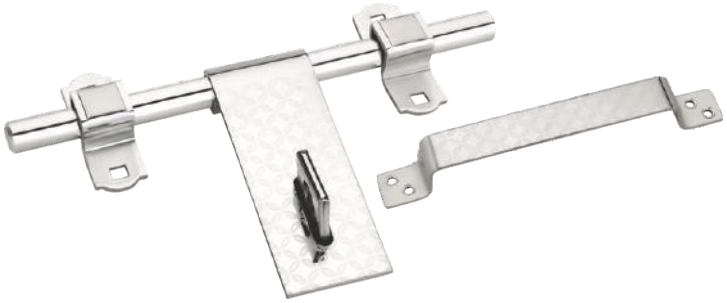

Mo. : 709

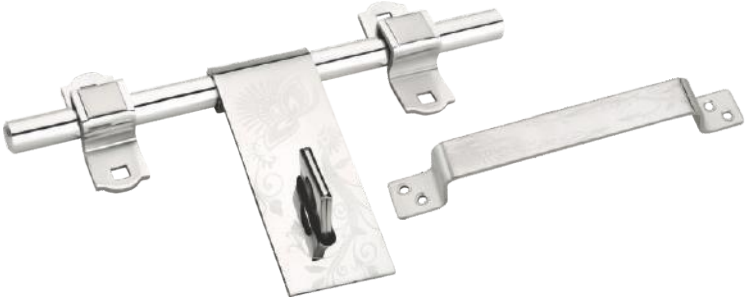

Mo. : 712

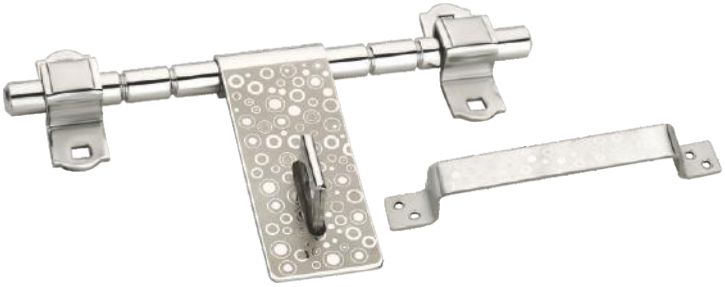

Size : 8”/ 10”/12”/14”.....
Rod :14mm/16mm
Sheet Size : (S.S.) 2mm/3mm/5mm

Mo.: 713

Mo.: 716

Mo.: 714

Mo.: 717

Mo.: 715

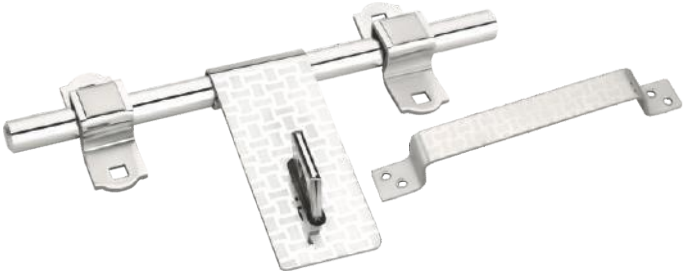

Mo.: 718

Size : 8”/ 10”/12”/14”.....
Rod :16mm

Mo.: 801

Mo.: 804

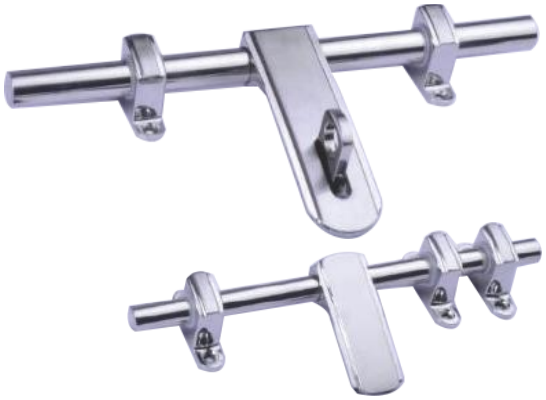

Mo.: 802

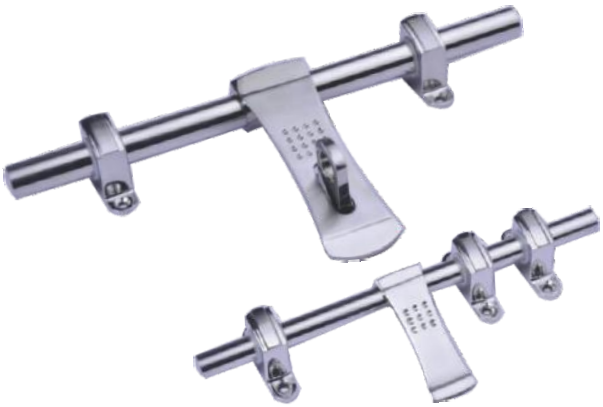

Mo.: 805

Mo.: 803

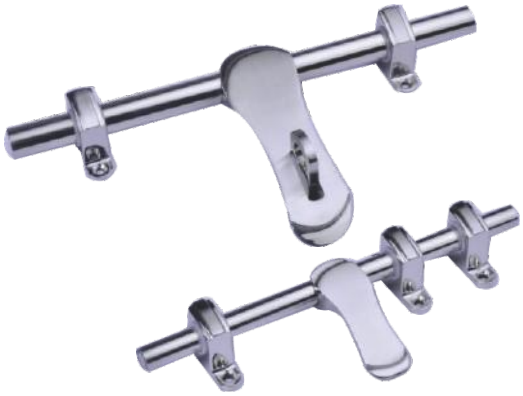

Mo.: 806

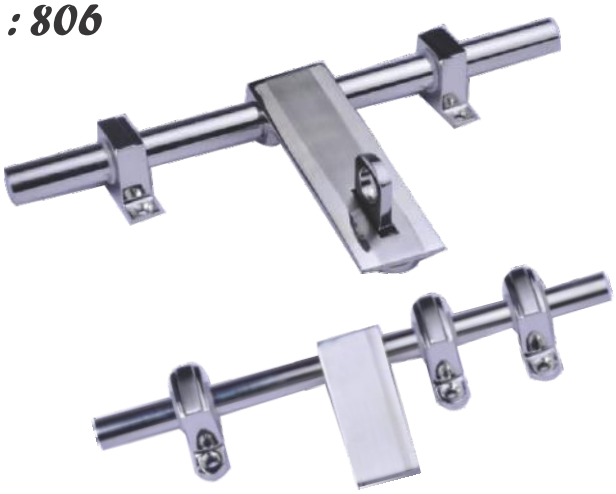

Size : 8”/ 10”/12”/14”.....
Rod :16mm

Mo. : 807

Mo. : 810

Mo. : 808

Mo. : 811

Mo. : 809

Mo. : 812

Size : 8”/ 10”/12”/14”.....
Rod :16mm

Mo. : 813

Mo. : 814

Mo. : 815

Size : 8”/ 10”/12”/14”.....
Rod :16mm

Mo. : 901

Mo. : 903

Mo. : 902

Mo. : 904

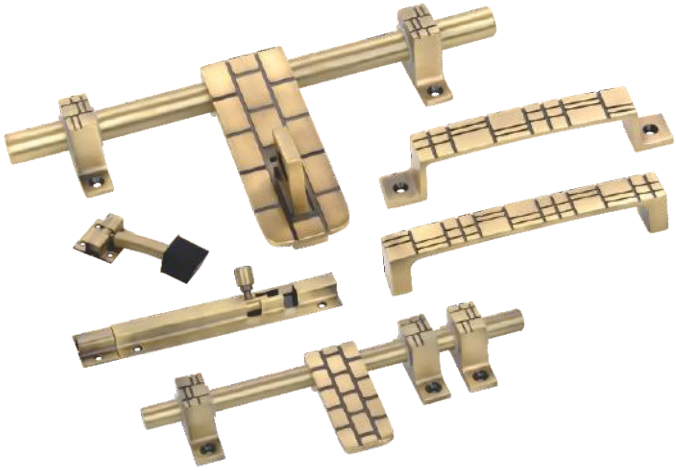

Size : 8”/ 10”/12”/14”.....
Rod :16mm

Mo. : 905

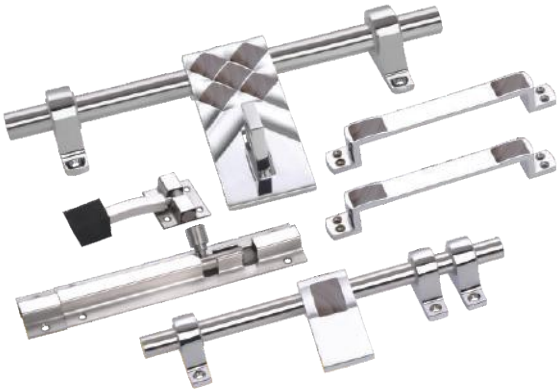

Mo. : 908

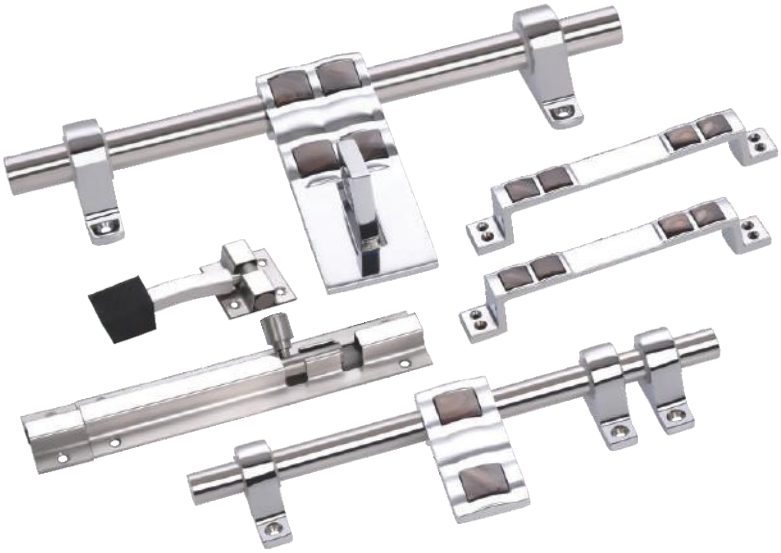

Mo. : 906

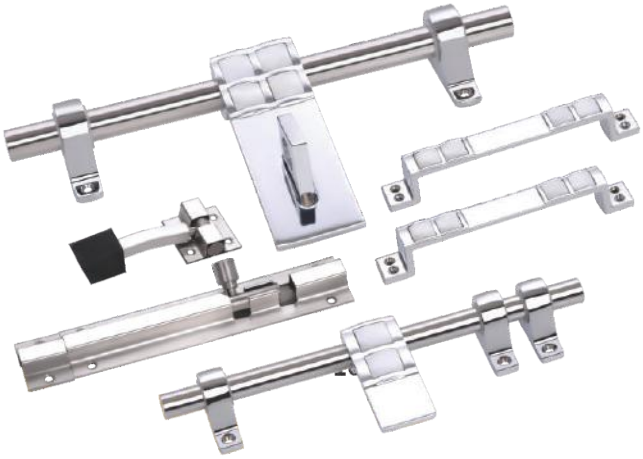

Mo. : 909

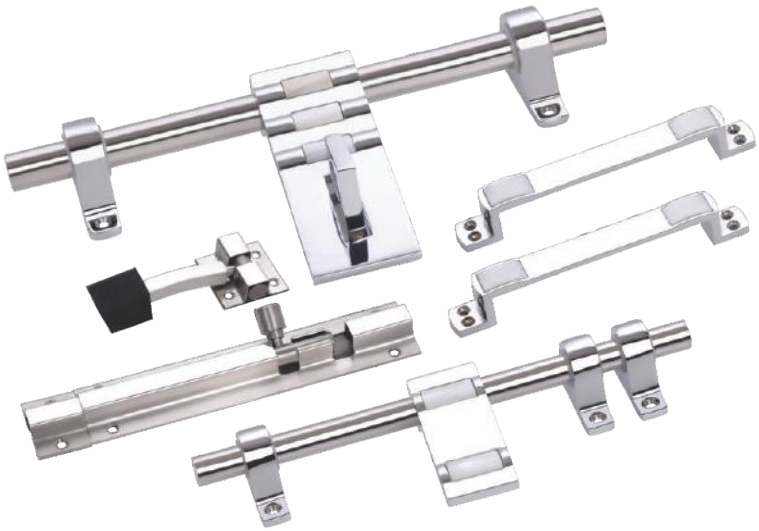

Mo. : 907

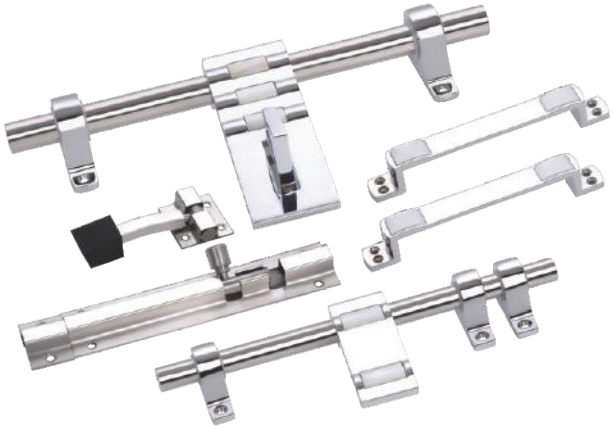

Size : 8”/ 10”/12”/14”.....
Rod :16mm

Mo. : 910

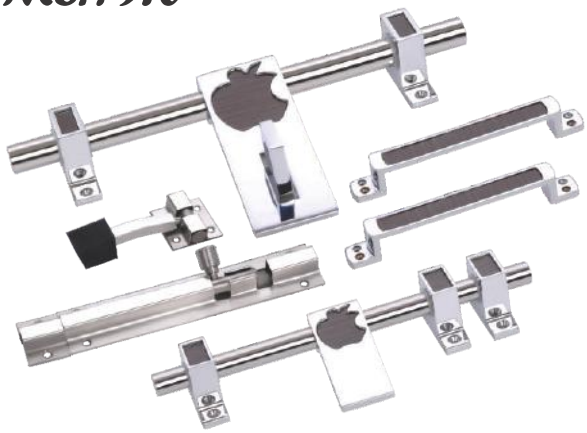

Mo. : 913

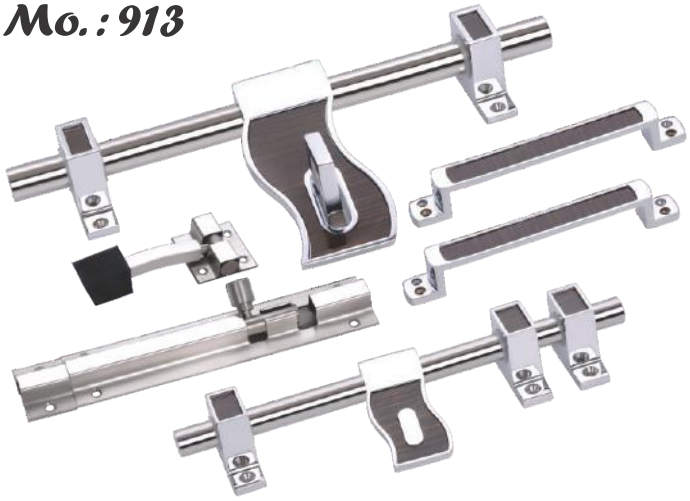

Mo. : 911

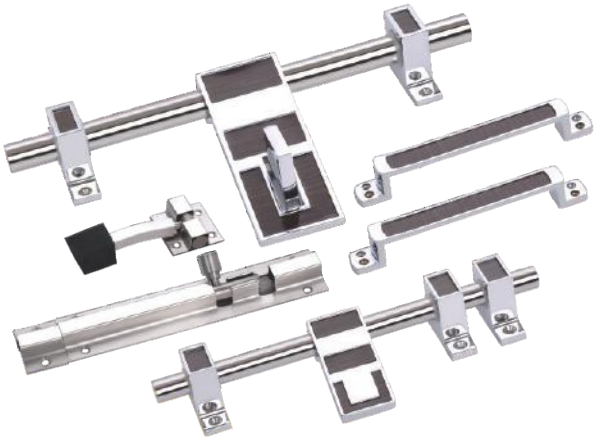

Mo. : 914

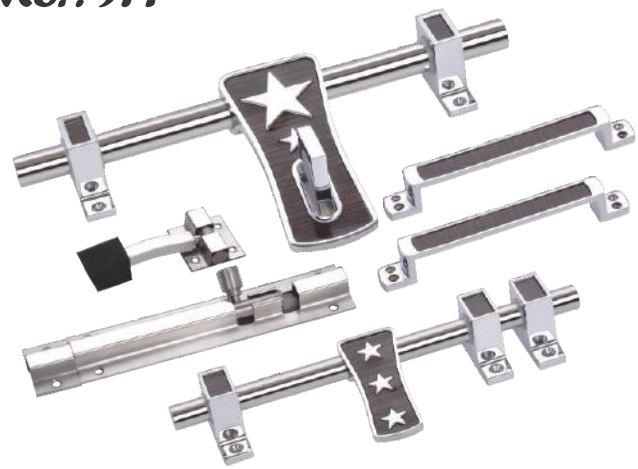

Mo. : 912

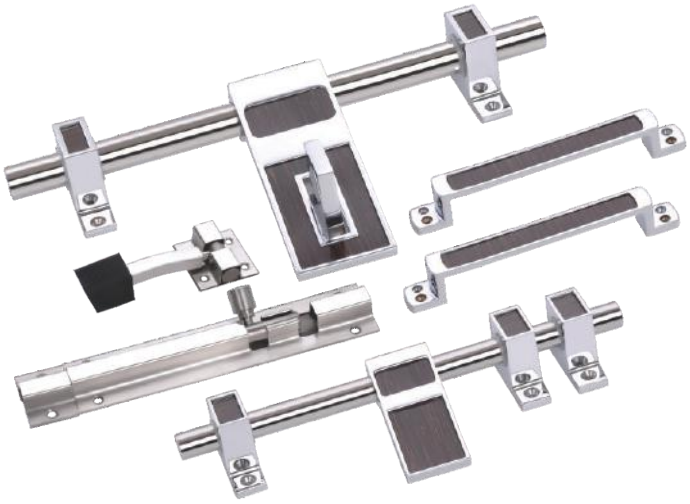

Mo. : 915

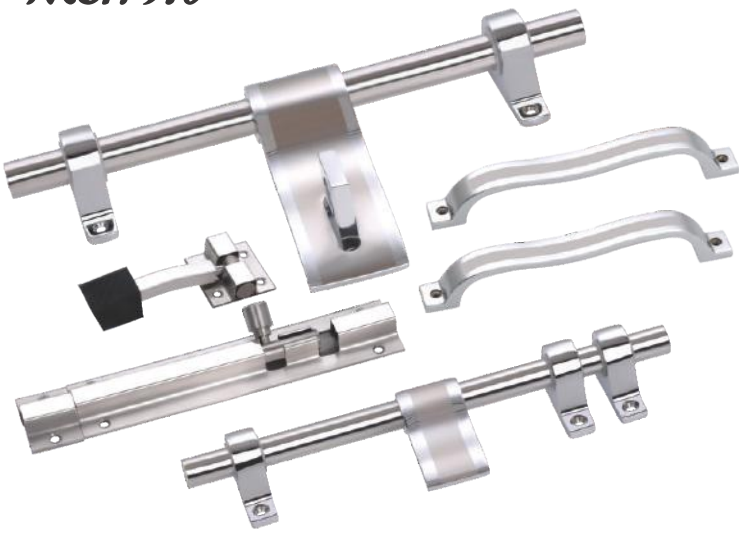

Size : 8”/ 10”/12”/14”.....
Rod :16mm

Mo. : 916

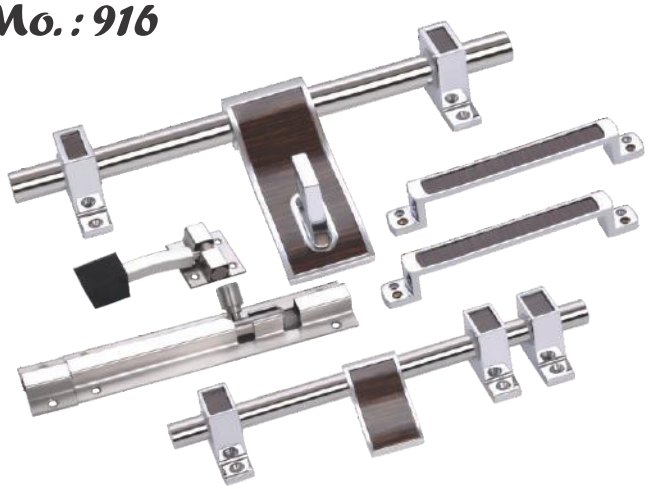

Mo. : 919

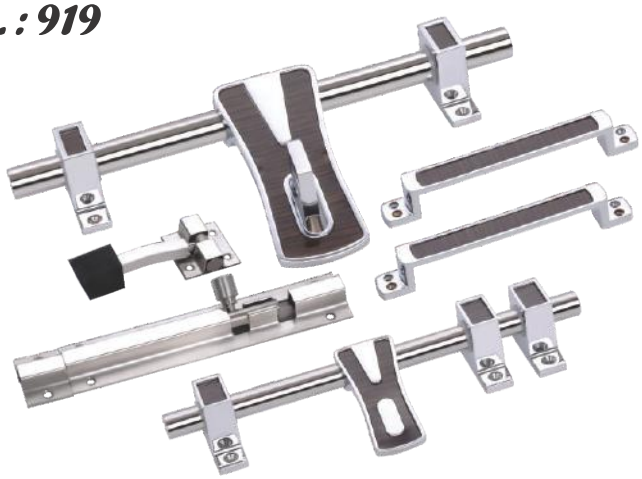

Mo. : 917

Mo. : 920

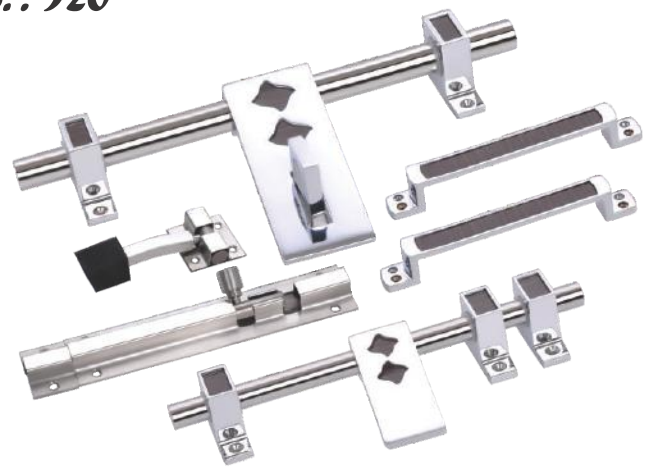

Mo. : 918

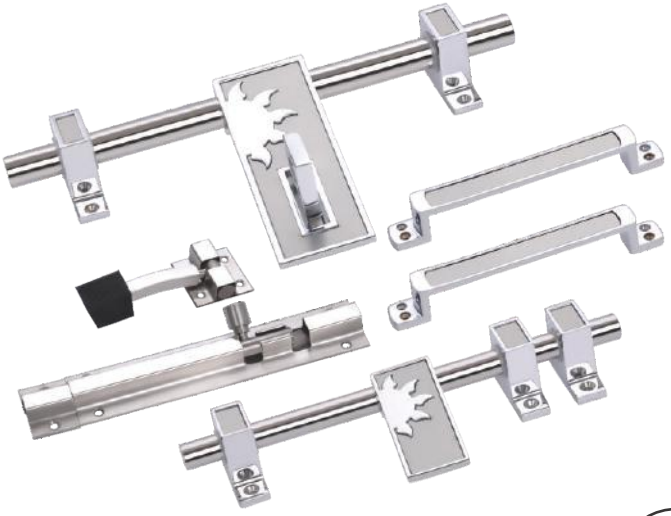

Mo. : 921

Size : 8”/ 10”/12”/14”.....
Rod :16mm

Mo. : 922

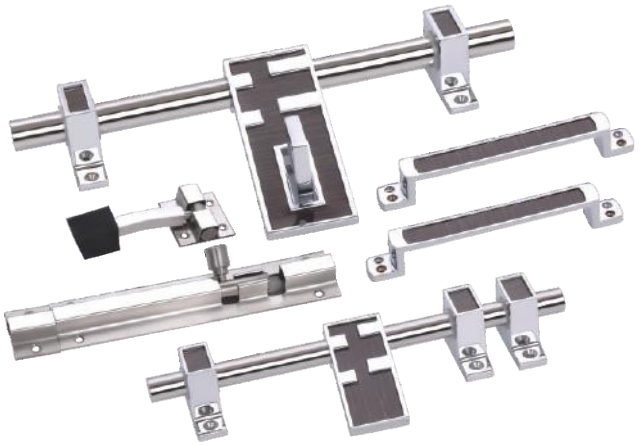

Mo. : 925

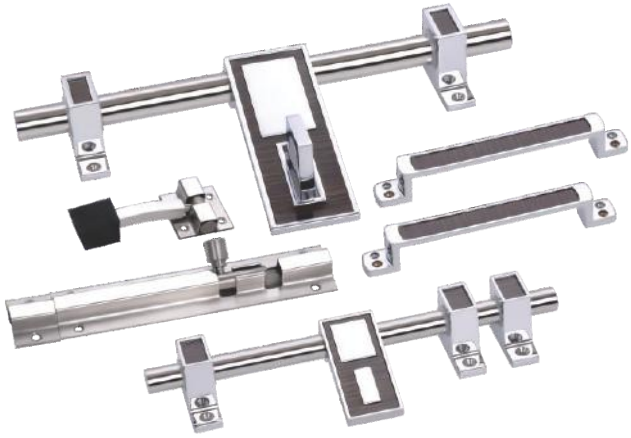

Mo. : 923

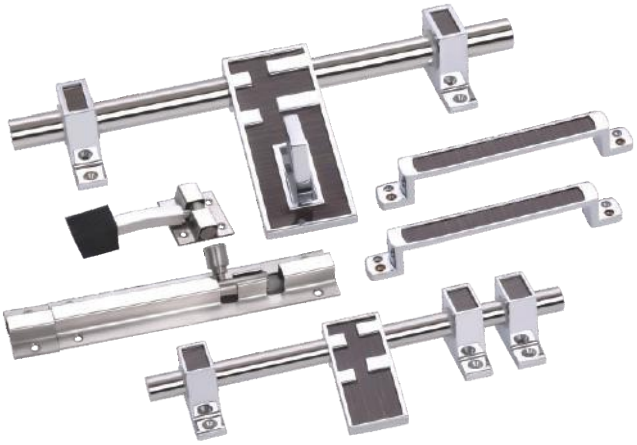

Mo. : 926

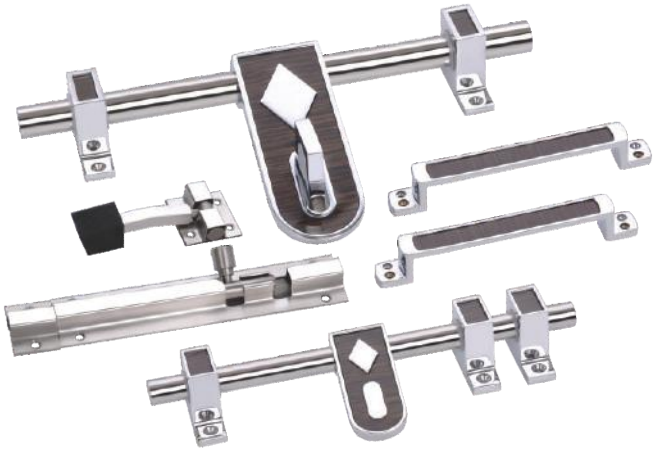

Mo. : 924

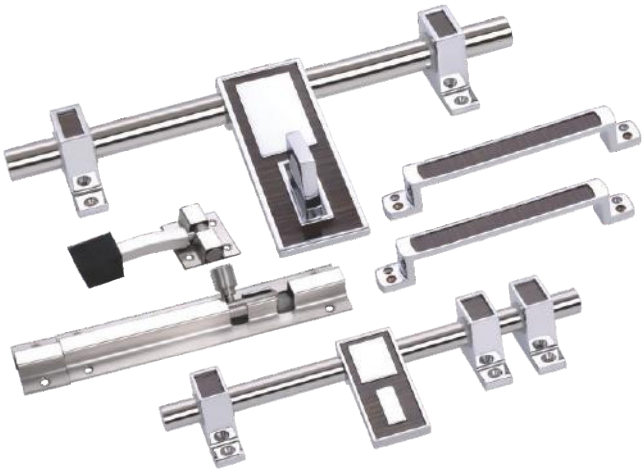

Mo. : 927

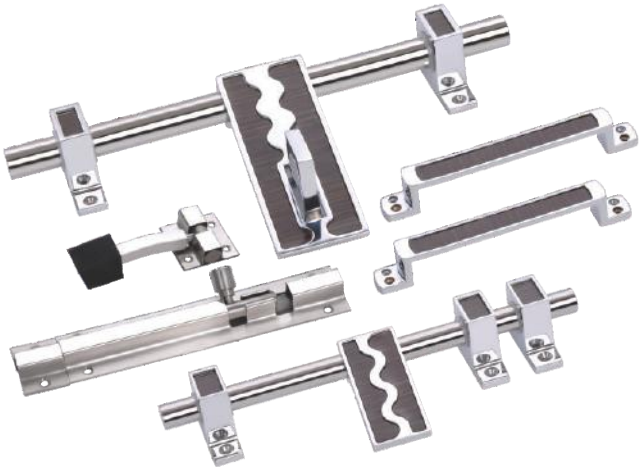

Size : 8”/ 10”/12”/14”.....
Rod :16mm

Mo. : 928

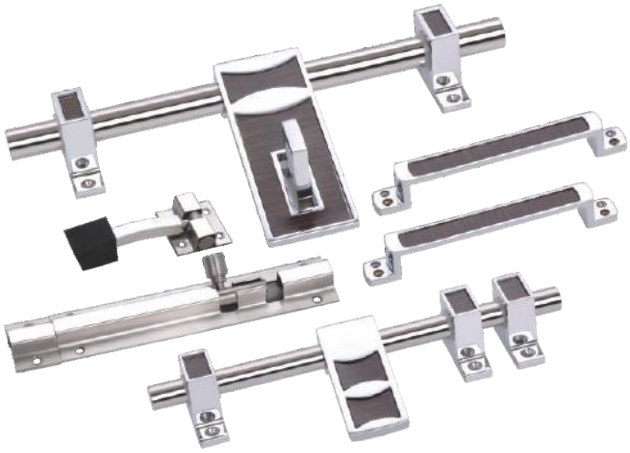

Mo. : 931

Mo. : 929

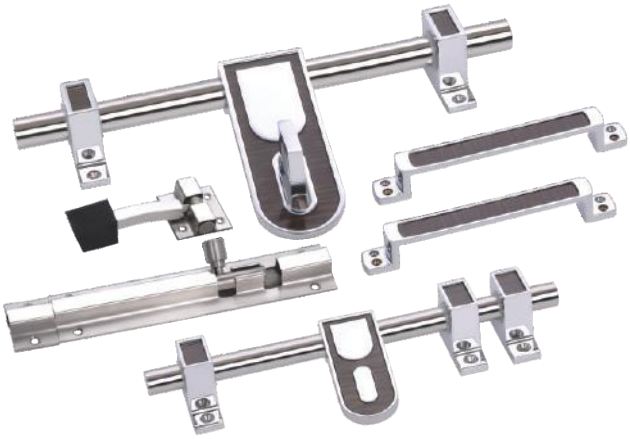

Mo. : 932

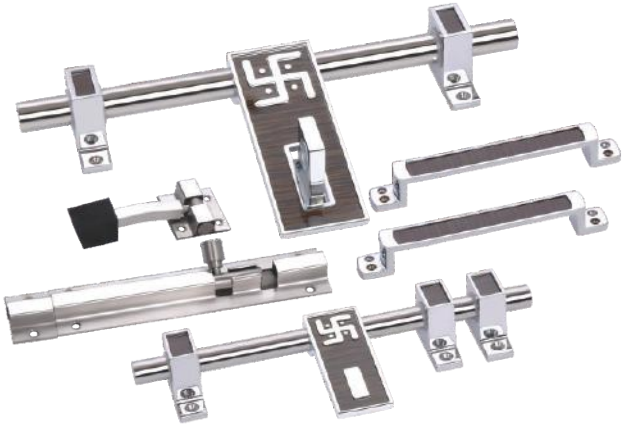

Mo. : 930

Mo. : 933

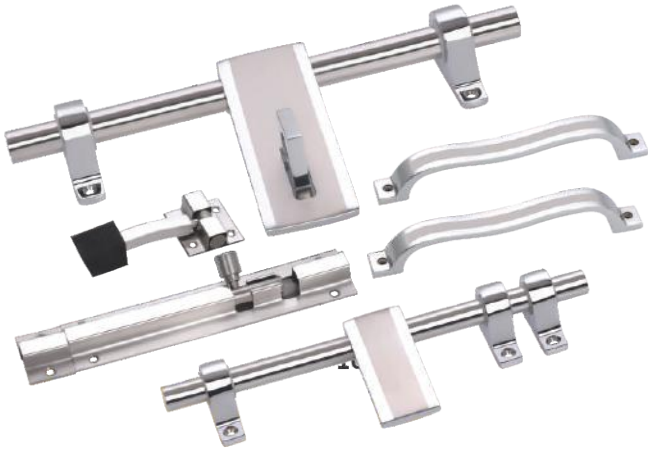

Size : 8”/ 10”/12”/14”.....
Rod :16mm

Mo.: 934

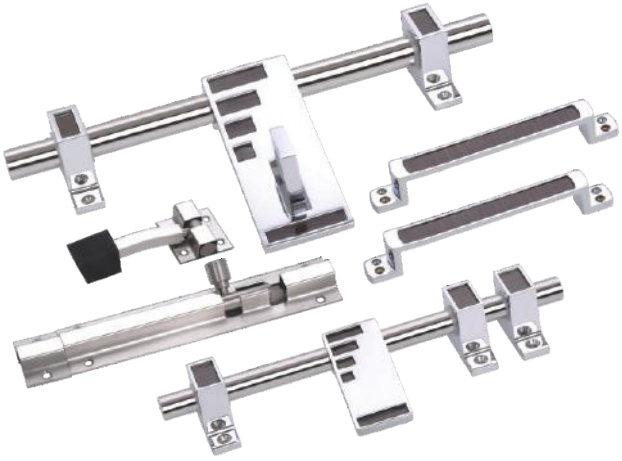

Mo.: 937

Mo.: 935

Mo.: 938

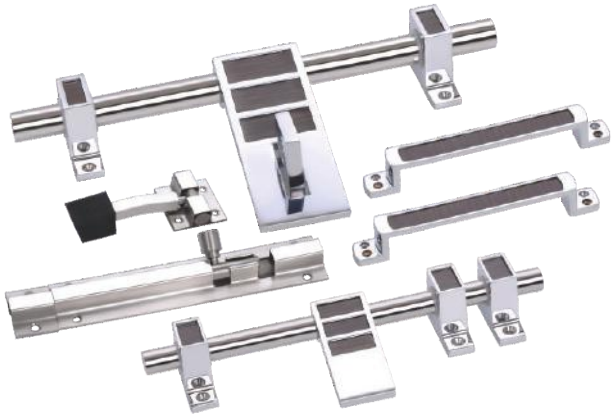

Mo.: 936

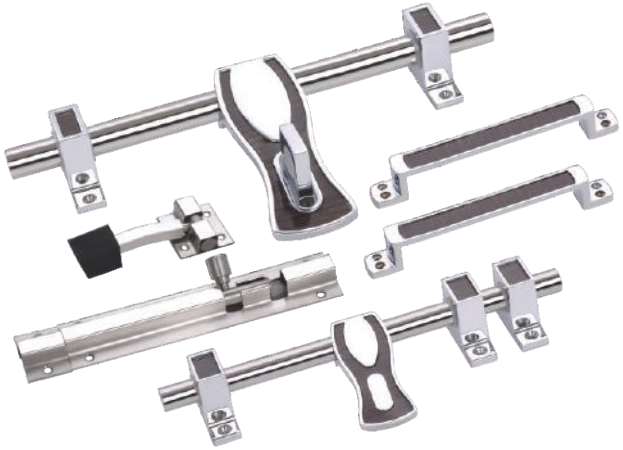

Mo.: 939

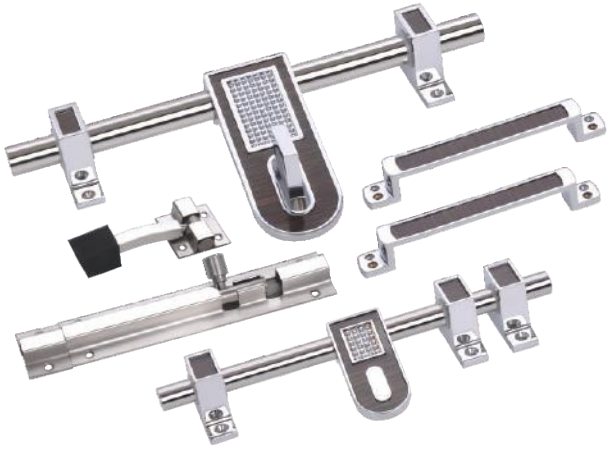

Size : 8”/ 10”/12”/14”.....
Rod :16mm

Mo. : 940

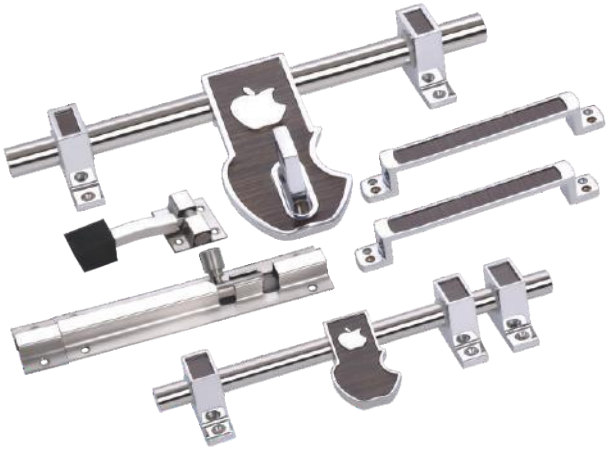

Mo. : 943

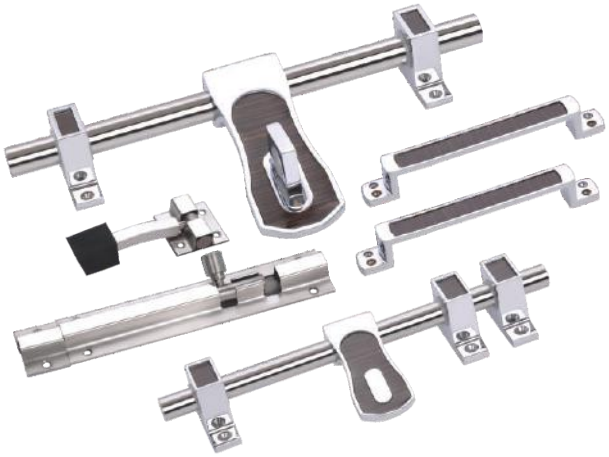

Mo. : 941

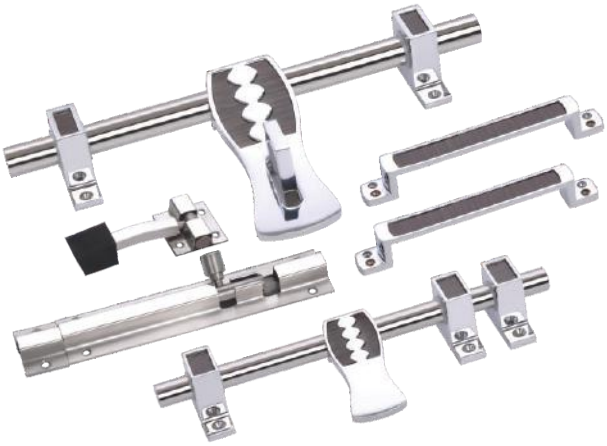

Mo. : 944

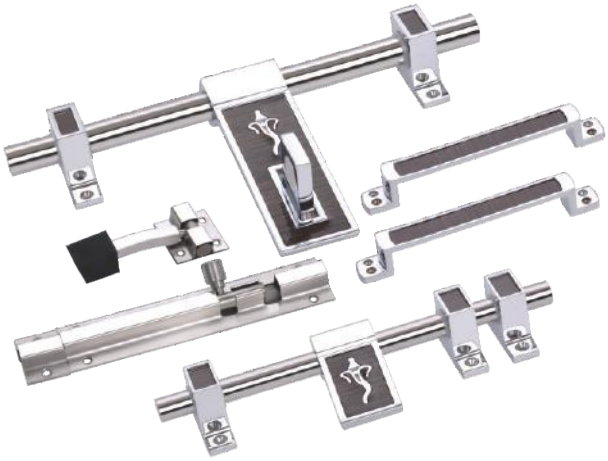

Mo. : 942

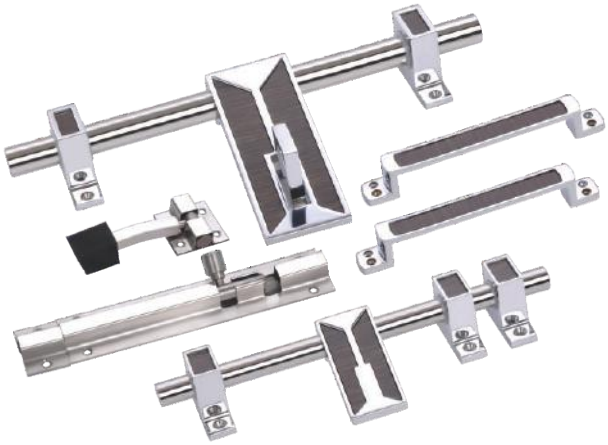

Mo. : 945

Size : 8”/ 10”/12”/14”.....
Rod :16mm

Mo. : 946

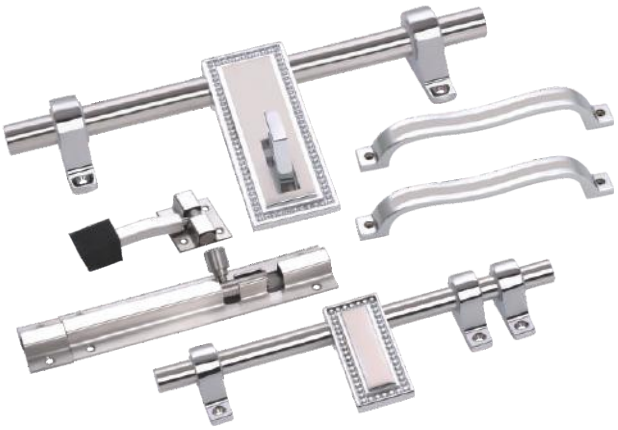

Mo. : 949

Mo. : 947

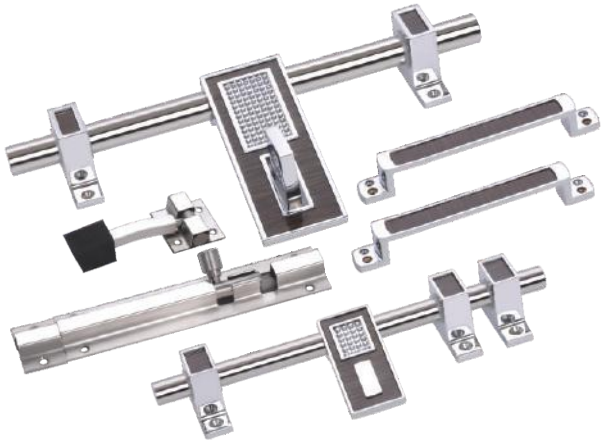

Mo. : 950

Mo. : 948

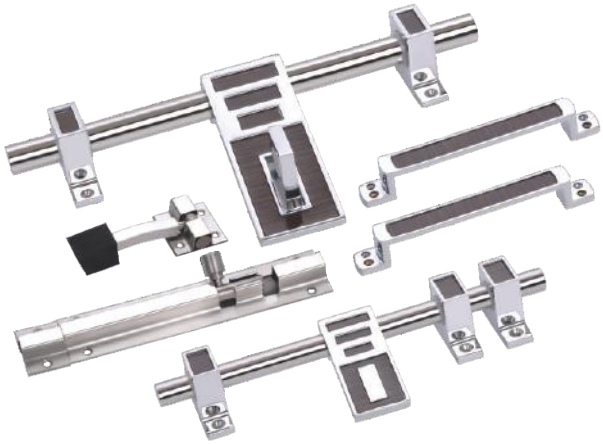

Mo. : 951

Size : 8”/ 10”/12”/14”.....
Rod :16mm

Mo. : 952

Size : 8”/ 10”/12”/14”.....
Rod :16 mm
Sheet Size : 3mm / 5mm

Mo. : Rajwadi

Mo. : Wave

Mo. : Leave

Mo. : Marshal

Mo. : S

Mo. : Spayro

Size : 8”/ 10”/12”/14”.....
Rod :16 mm
Sheet Size : 3mm / 5mm

Mo. : Fish

Mo. : Flower

Mo. : Chota Bheem

Size : 8”/ 10”/12”/14”.....
Rod :16 mm
Sheet Size : 3mm / 5mm

Mo. : Fish

Mo. : S

Mo. : Rajwadi

Mo. : Leave

Mo. : Spayro

Mo. : Marshal

Size : 8”/ 10”/12”/14”.....
Rod :16 mm
Sheet Size : 3mm / 5mm

Mo. : Flower

Mo. : Wave

Mo. : Chota Bheem

Size : 8”/ 10”/12”/14”.....
Rod :16 mm
Sheet Size : 3mm / 5mm

Mo. : Fish

Mo. : S

Mo. : Rajwadi

Mo. : Leave

Mo. : Spayro

Mo. : Marshal

Size : 8”/ 10”/12”/14”.....
Rod :16 mm
Sheet Size : 3mm / 5mm

Mo. : S

Mo. : Wave

Mo. : Chota Bheem

Size : 8”/ 10”/12”/14”.....
Rod :16 mm
Sheet Size : Regular

Mo. : 1001

Mo. : 1004

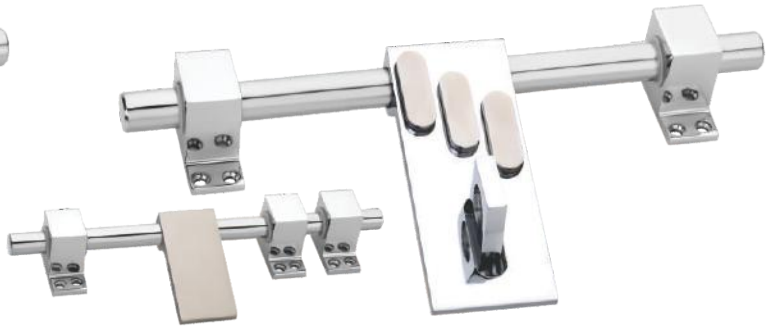

Mo. : 1002

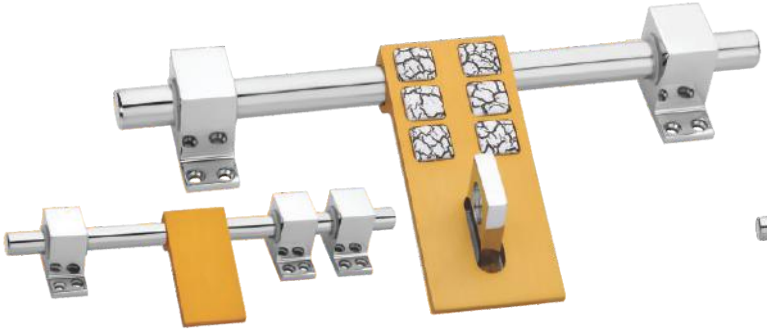

Mo. : 1005

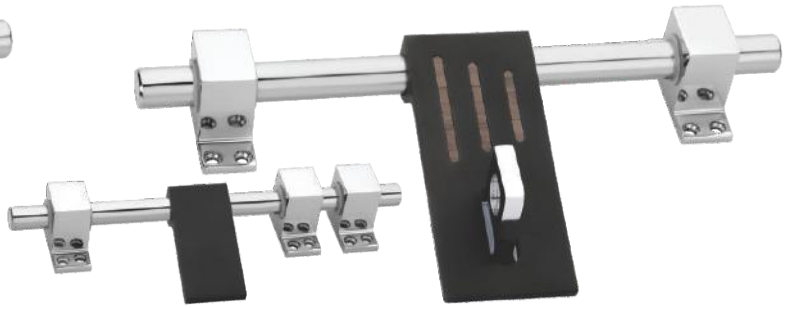

Mo. : 1003

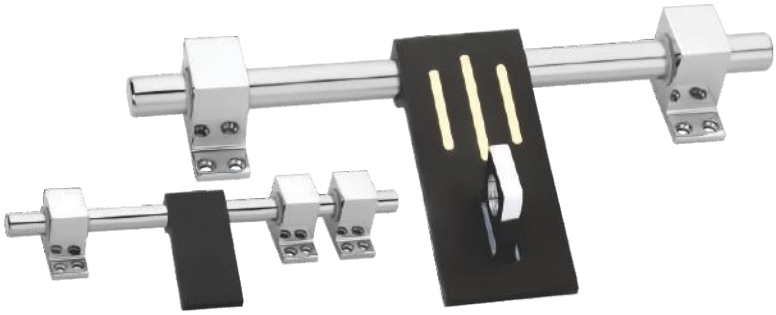

Mo. : 1006

Size : 8”/ 10”/12”/14”.....
Rod :16 mm
Sheet Size : Regular

Mo. : 1007

Mo. : 1010

Mo. : 1008

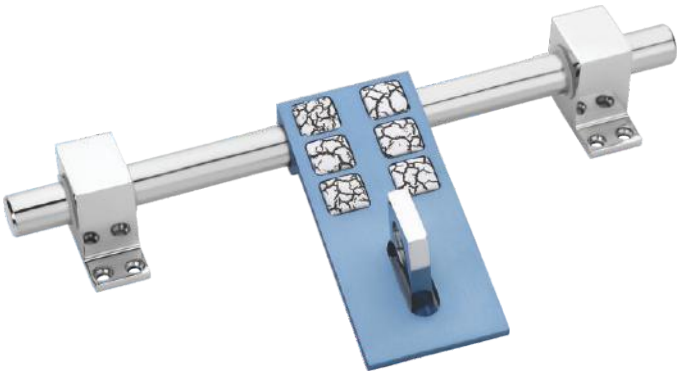

Mo. : 1011

Mo. : 1009

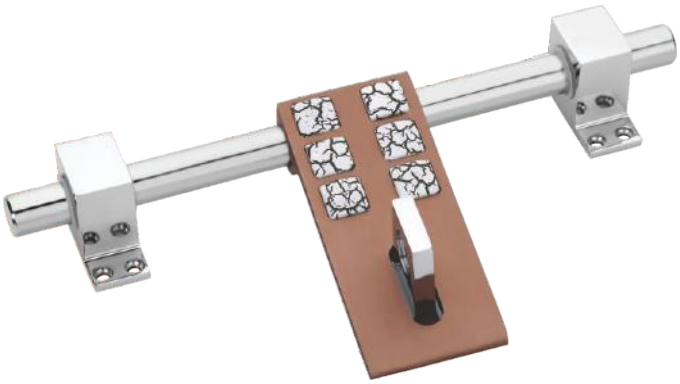

Mo. : 1012

Size : 8”/ 10”/12”/14”.....
Rod :16 mm
Sheet Size : Regular

Mo. : 1503

Mo. : 1501

Mo. : 1504

Mo. : 1502

Mo. : 1505

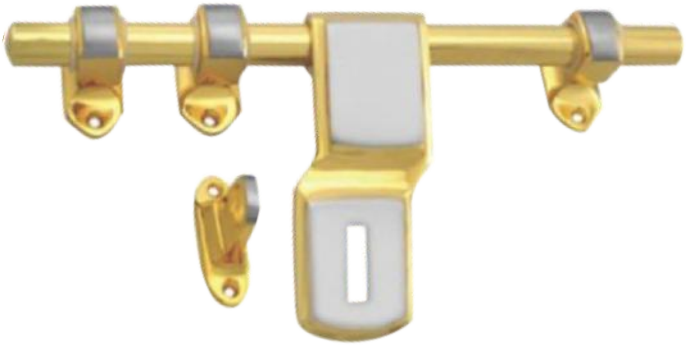

Available In *10mm Rod Bathroom Kit
*12mm Rod Bathroom Kit
(Dot, Laher, Glossy, Rose & all Model)

Mo.: 00001

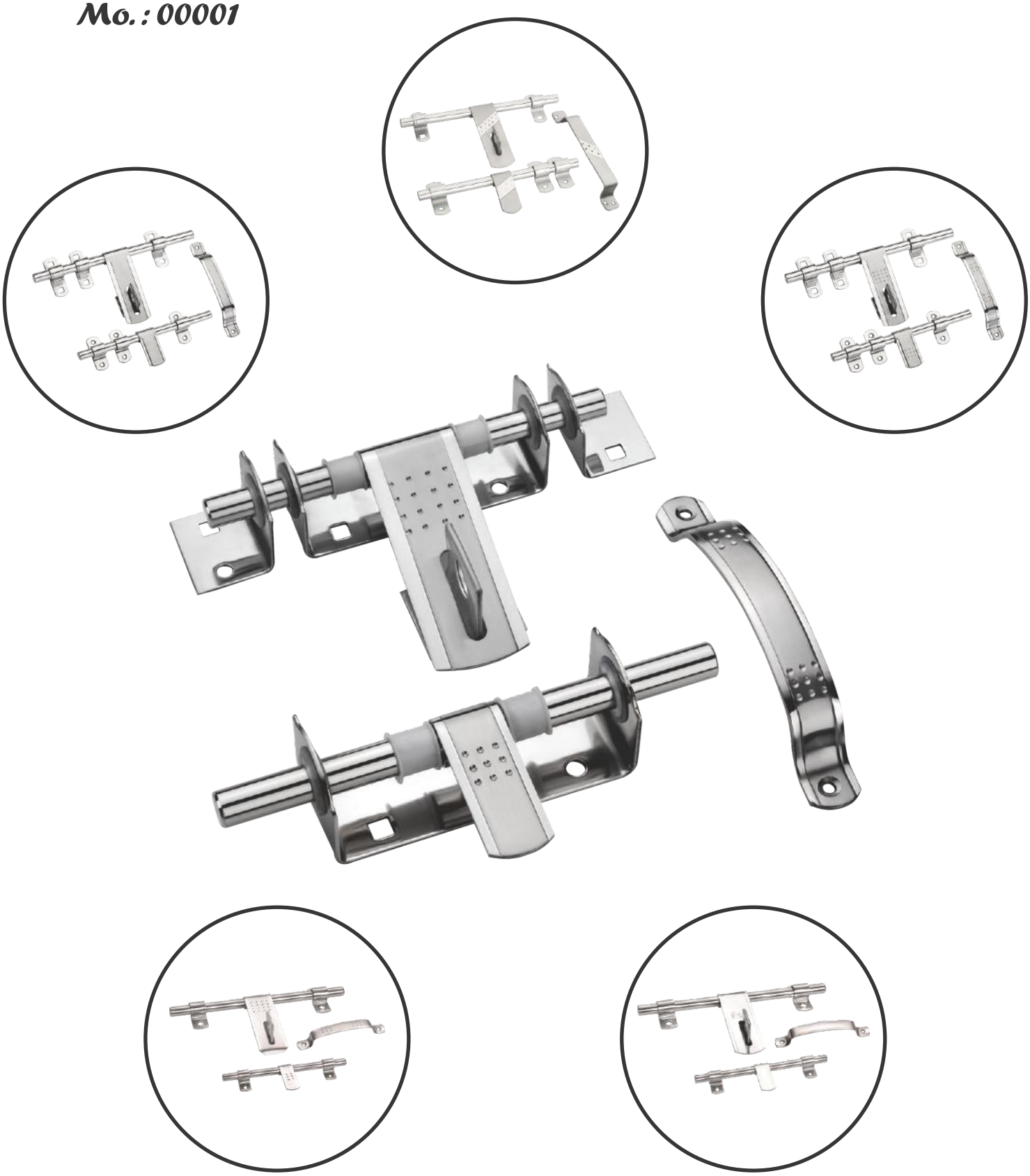

Model : Ganesh, Shubh-Labha & Swastik

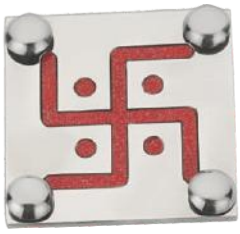

Ganesh - 1

Ganesh - 2

Model : Jay Jaggarnath

Model : Ganesh, Laksmi

Handle

Model : 20/20

Model : 50/50

Model : C-Line

Model : Centro

Handle

Model : Silver Line

Model : 2 Tone

Model : Tpl

Handle

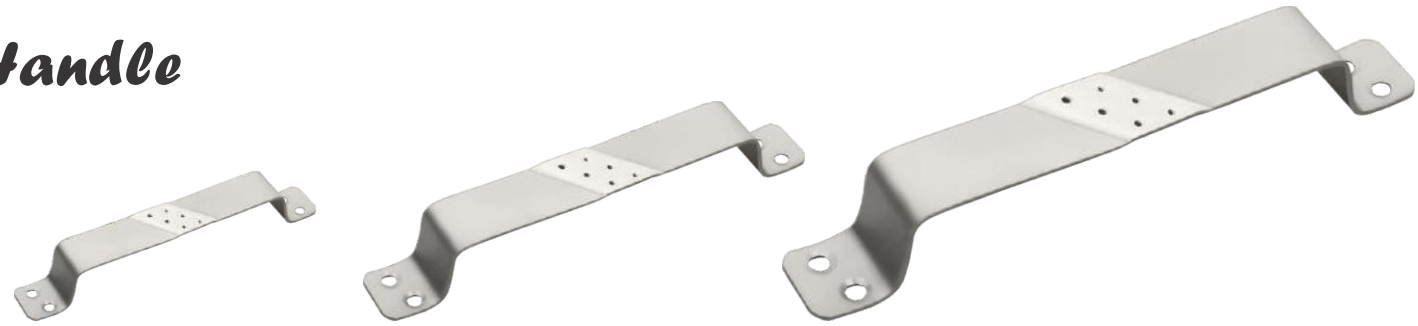

Model : Dot Cadbury

Model : S-Type

Model : Middle Stump

Model : Laher

Handle

Model : i-Line

Model : Damru

Model :Tiranga

Model : C-cut

Handle

Model : Glocy"C

Model : Dot"C

Model : Rose

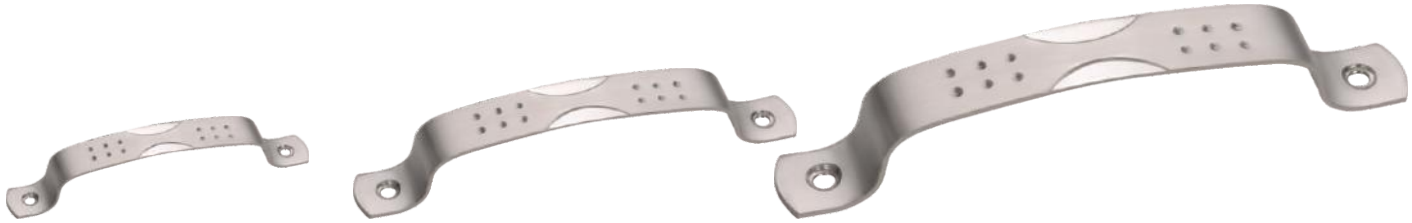

Model : C-cut Dot

Handle

Model : Matca

Model : Royal

Model : King

Model : Apple

Model : Queen

Handle

Model :Telephone

Model : Classic

Handle

Model : Out Side Telephone

Model : Cut Handle

Model : Rocket

Model : Goli Handle

Model :Telephone

Mo. : Outside Cabinet Telephone

Model : 008

Model : 009

Model : 0010

Model : 0011

Model : 3G Handle

Handle

Model : 1001

Model : 1002

Handle

Model : 1003

Model : 1004

Handle

Model : 2001

Model : 2002

Model : 2003

Model : 2004

Model : 2005

Model : 2006

Model : 2007

Model : 2008

Model : 2009

Model : 2010

Model : 2011

Model : 2012

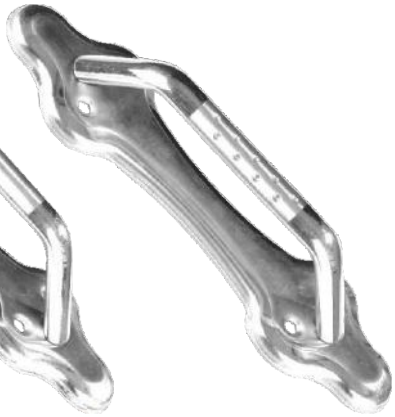

Model : 2013

Handle

Model : 3001

Model : 3002

Model : 3003

Model : 3004

Model : 3005

Model : 3006

Model : 4001

Model : 4002

Model : 4003

Model : 4004

Heavy Door Chain

Medium Door Chain

Table Chain

Light Door Chain

Julla Rod & S Hook

Bottom Cada

Bering Cada

Universal Bracket

Mo. : DE-1

Mo. : DE-2

Mo. : DE-3

Mo. : DE-4

Mo. : DE-5

Mo. : DE-6

Mo. : DE-7

Mo. : DE-8

Mo. : DE-9

Mo. : DE-10

Mo. : DE-11

Mo. : DE-12

Mo.: DSJ - 1

Mo.: Baby Letch

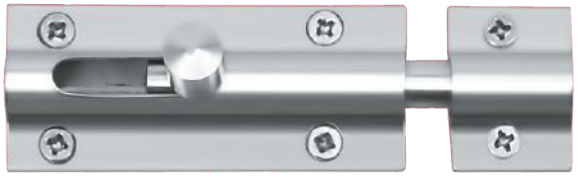

Mo.:TBJ - 3

Mo.:TBJ - 4

Mo.:TBJ - 5

Mo.:TBJ - 6

Mo.:TBJ - 7

Mo.:TBJ - 8

Mo. : Round Nobe 12 mm
10 mm Road

Mo. : Square Nobe 12 mm
12 mm Road

Mo. : Round T.T. 12 mm
10 mm Road

Mo. : Single Pics
9 & 10 mm Road

Mo. :Triangle Nobe 12 mm
10 mm Road

Mo. :Triangle Bottle Nobe 12 mm
10 mm Road

Mo. : T.T. Bottle Nobe 12 mm
10 mm Road

Mo. : T.T. Square Nobe 12 mm
10 mm Road

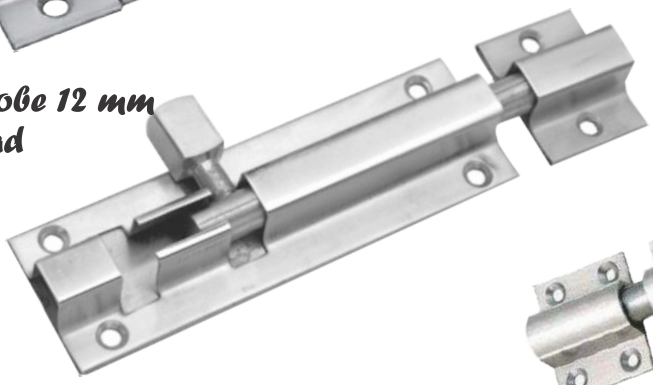

Mo. : T.T. Bottle Nobe 12 mm
12 mm Road

Mo. : Baby Letch Square

Mo. : Baby Letch Round

Mo. : Baby Letch Heavy Square

Mo. : Marble Tower Bolt

Mo. : Camb Bolt

Mo. : Cansil Tower Bolt

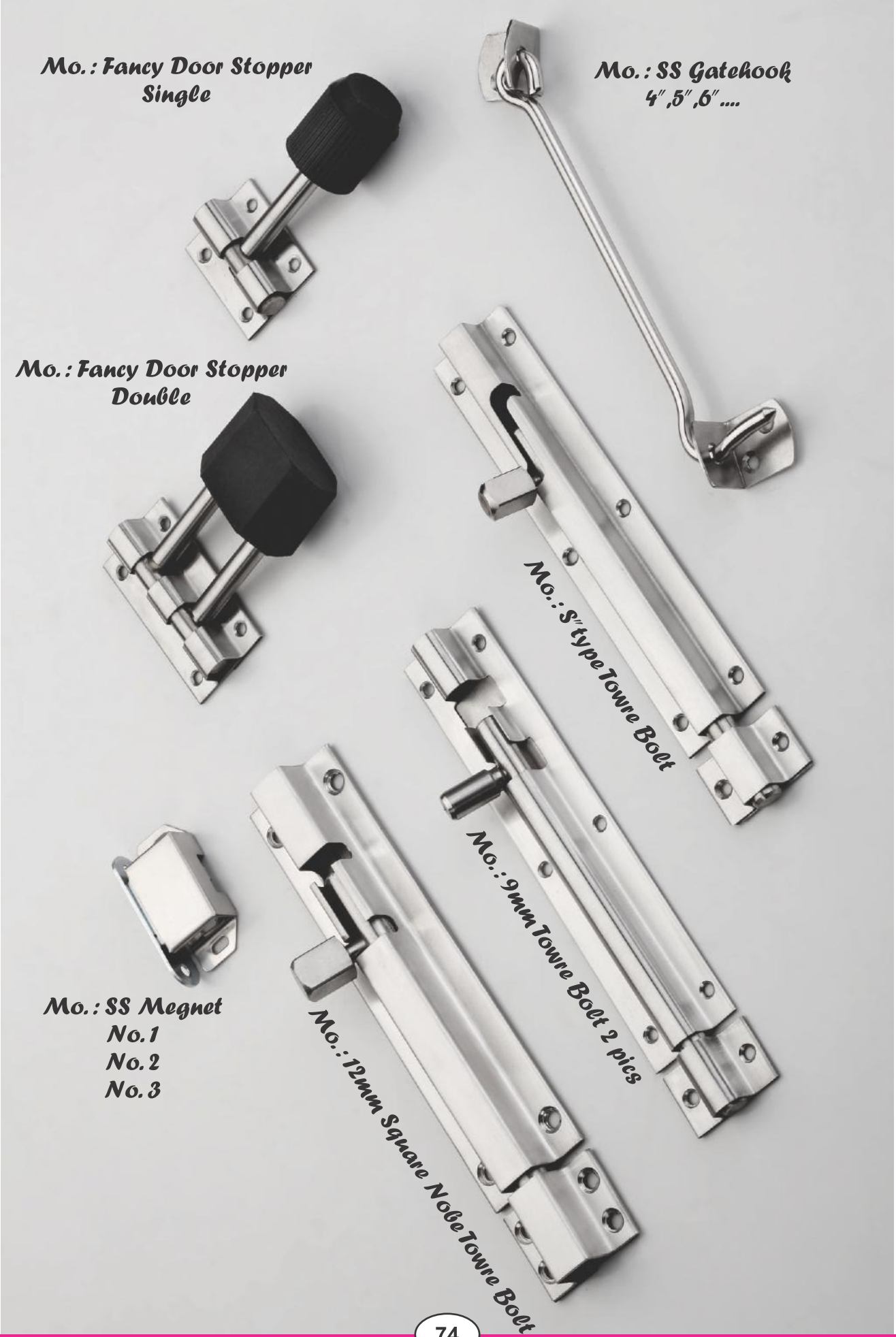
Mo.: Fancy Door Stopper
Single
Mo.: SS Gatehook
4",5",6"....
Mo.: Fancy Door Stopper
Double
Mo.: 8" type Towre Bolt
Mo.: 9mm Towre Bolt 2 pics
Mo.: SS Megnet
No.1
No.2
No.3
Mo.: 12mm Square Nobe Towre Bolt

Mo. : Al.T.B. No. 1

Mo. : Al.T.B. No. 2

Mo. : Al.T.B. No.3

Mo. : Al.T.B. No. 4

Mo. : Al.T.B. No. 5

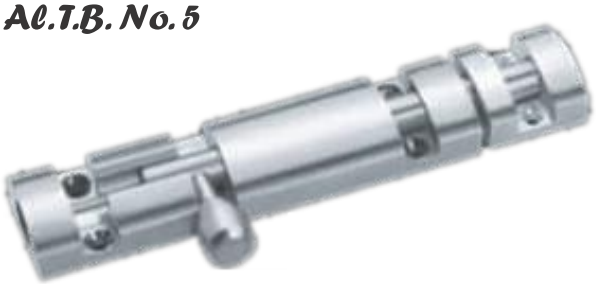

Mo. : Al.T.B. No. 6

Mo. : Al.T.B. No. 7

Mo. : Al.T.B. No. 8

Mo. : Al.T.B. No. 9
(Antiq)

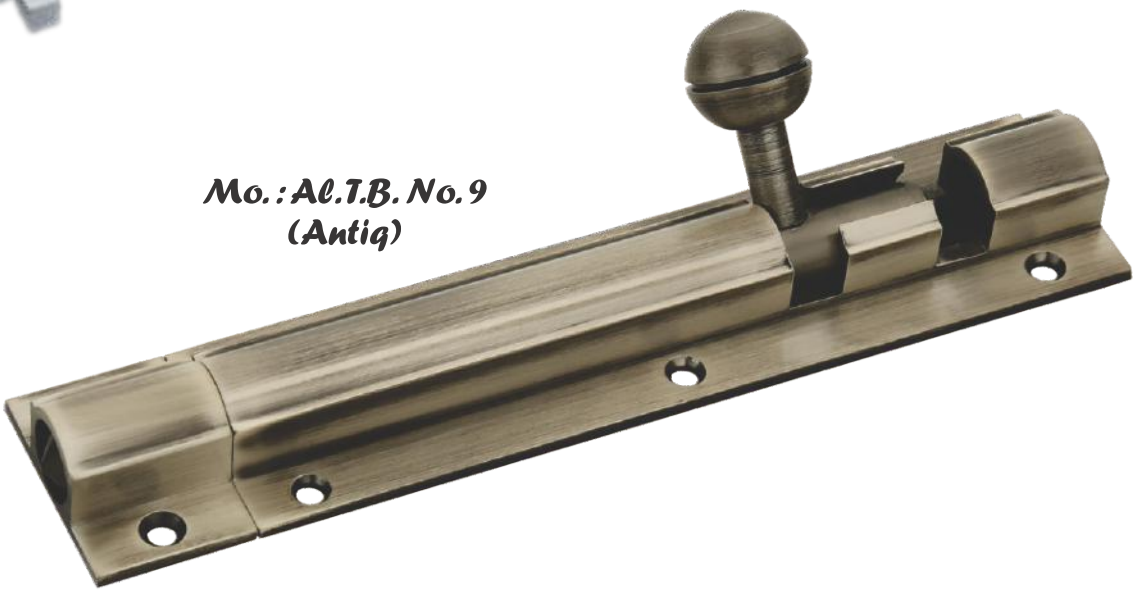

Mo. : Al.T.B. No.10

Mo. : Al.T.B. No.11

Mo. : Al.T.B. No.12

Mo. : Al.T.B. No.13

Mo. : Al.T.B. No.14

Mo. : Al.T.B. No.15

Mo. :
Al. Bl. No. 001

Mo. : Al. Bl. No. 002

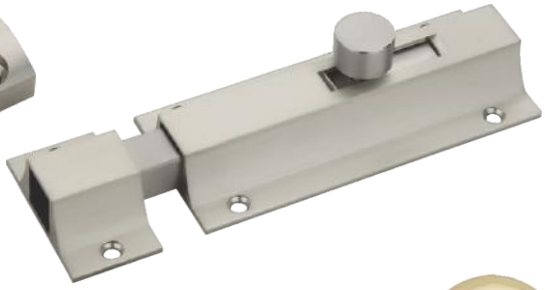

Mo. : Al. Bl. No. 003

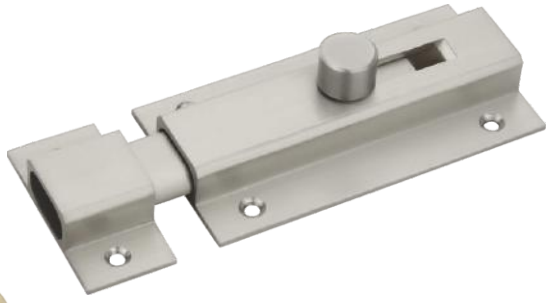

Mo. : Al.T.B. No.16
(Gold)

Mo. : Brass.T.B. No. 1
(Gold)

Mo. : Brass.T.B. No. 2
(Gold)

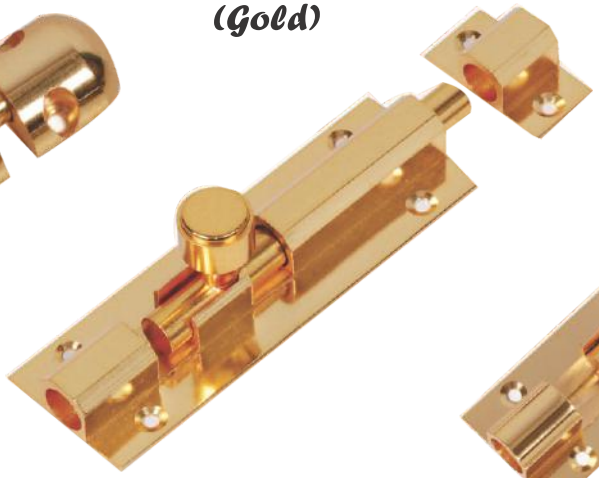

Mo. : Brass.T.B. No. 3
(Gold)

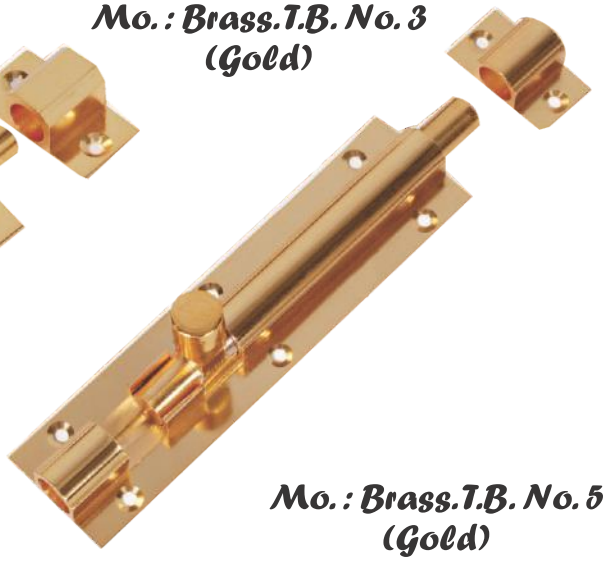

Mo. : Brass.T.B. No. 5
(Gold)

Mo. : Brass.T.B. No. 4
(Gold)

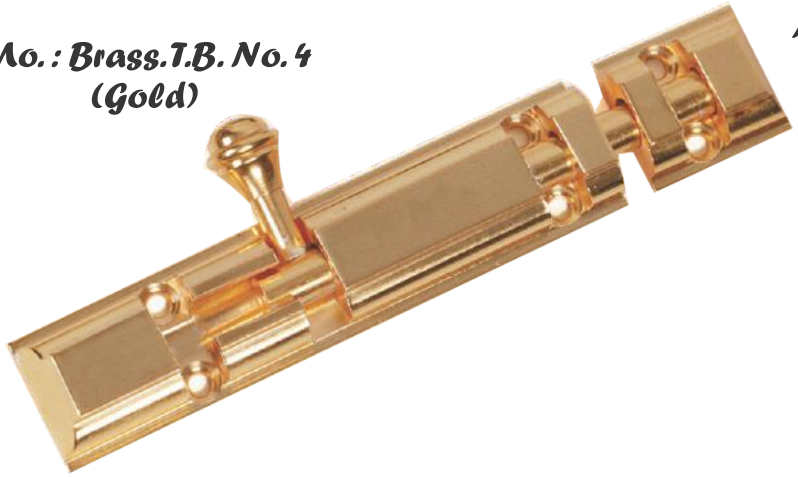

Mo. : Brass. Marble T.B.
(Gold)

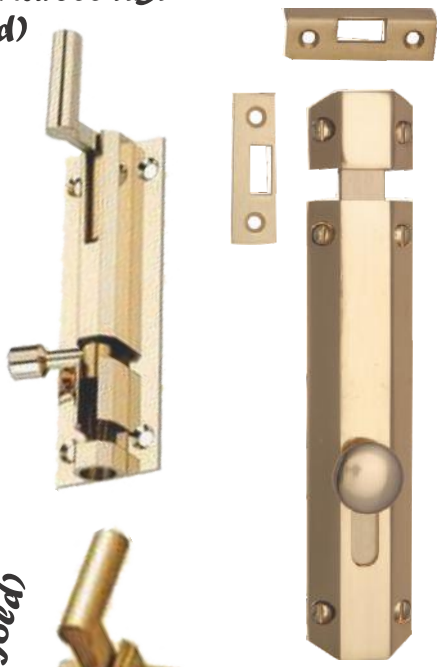

Mo. : Brass.T.B. No. 6 (Gold)

Mo. : Brass.T.B. No. 7 (Gold)

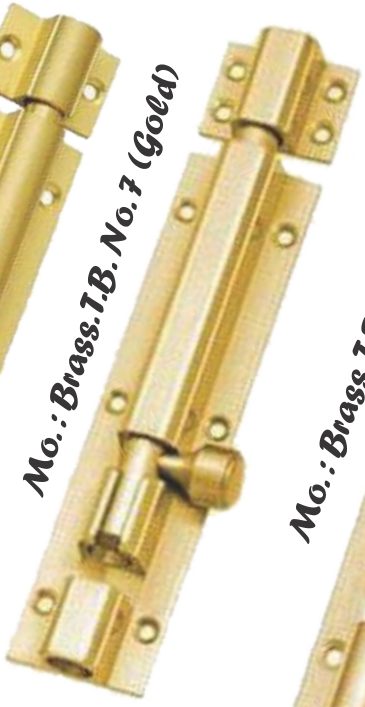

Mo. : Brass.T.B. No. 8 (Gold)

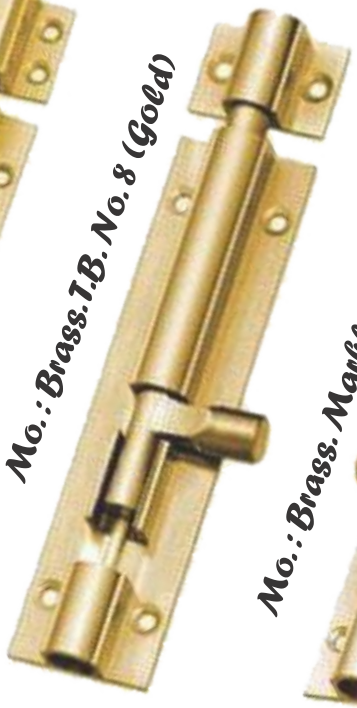

Mo. : Brass. Marble T.B. Fancy (Gold)

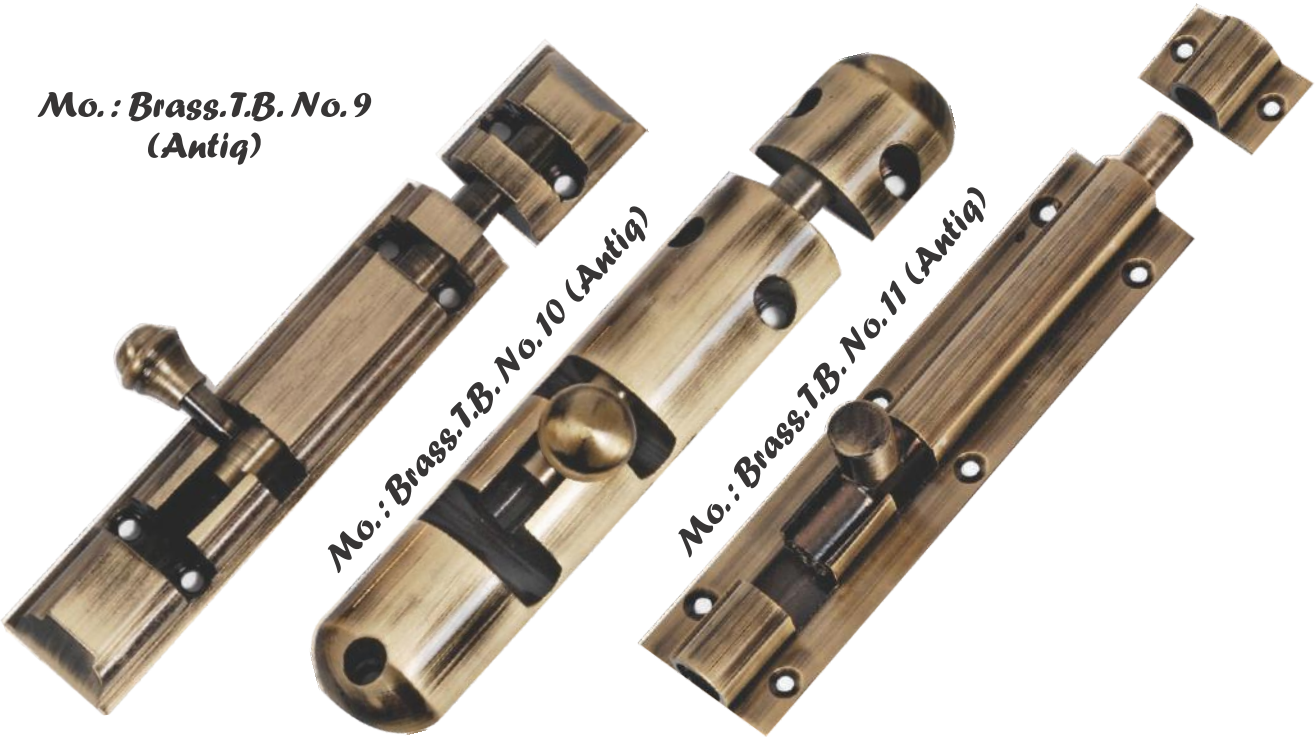

Mo. : Brass.T.B. No. 9
(Antiq)

Mo. : Brass.T.B. No. 10 (Antiq)

Mo. : Brass.T.B. No. 11 (Antiq)

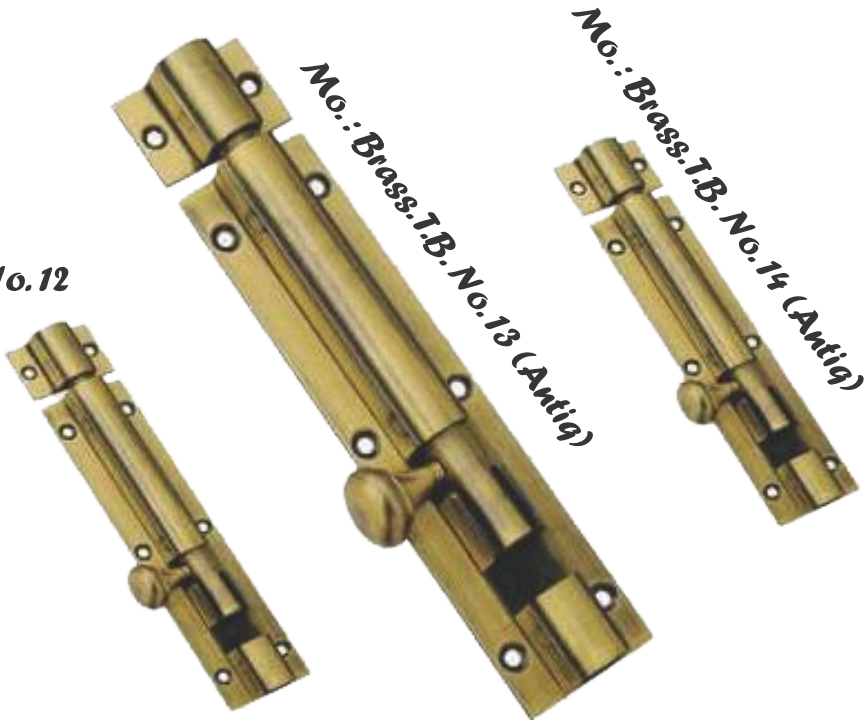

Mo. : Brass.T.B. No. 12
(Antiq)

Mo. : Brass.T.B. No. 13 (Antiq)

Mo. : Brass.T.B. No. 14 (Antiq)

Mo. : Brass.T.B. No. 15
(Antiq)

Mo.: Brass.T.B.No.16 (Silver)

Mo.: Brass.T.B.No.17 (Silver)

Mo.: Brass.T.B.No.18 (Silver)

Mo.: Brass.T.B.Marble (Silver)

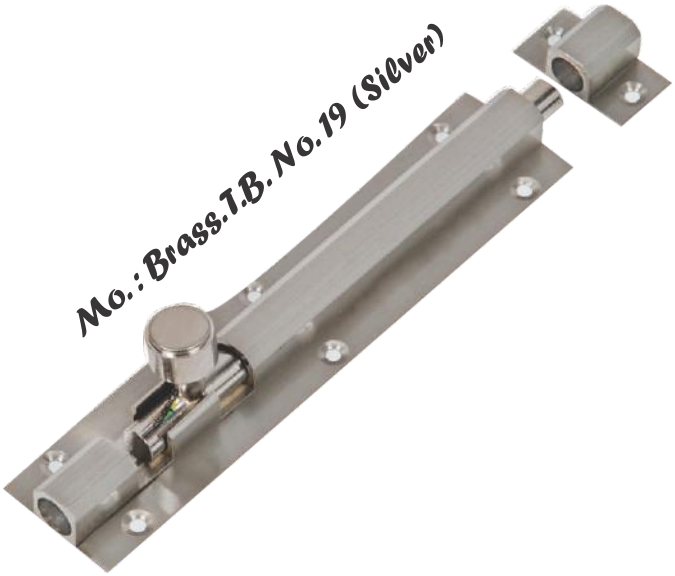

Mo.: Brass.T.B.No.19 (Silver)

Mo.: Brass Camb Bolt (Silver)

Mo.: Brass.Baby Latch (Silver)

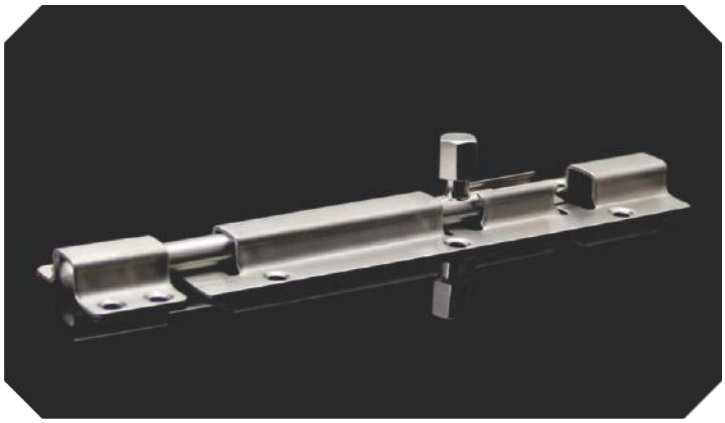

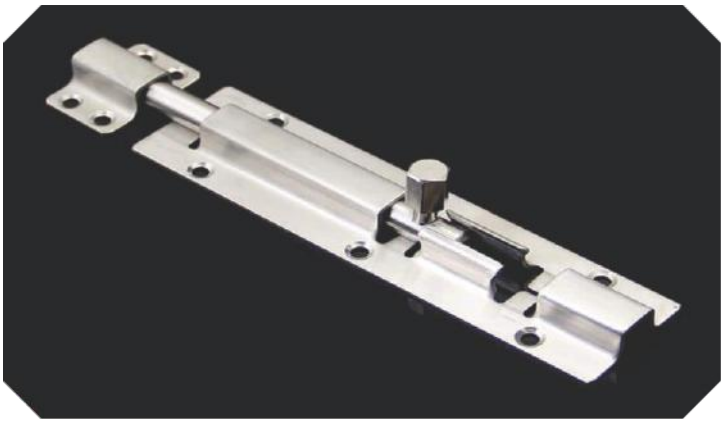

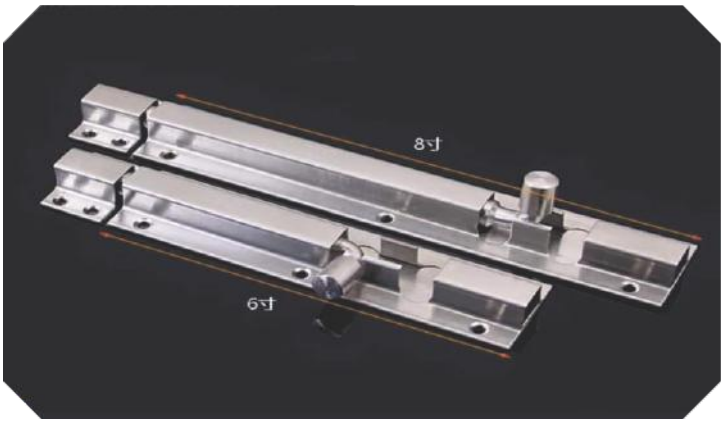
8ft
6ft

Mo. : Maharaja T.B. 101

Mo. : Maharaja T.B. 102

Mo. : Maharaja T.B. 103

Mo. : Maharaja T.B. 104

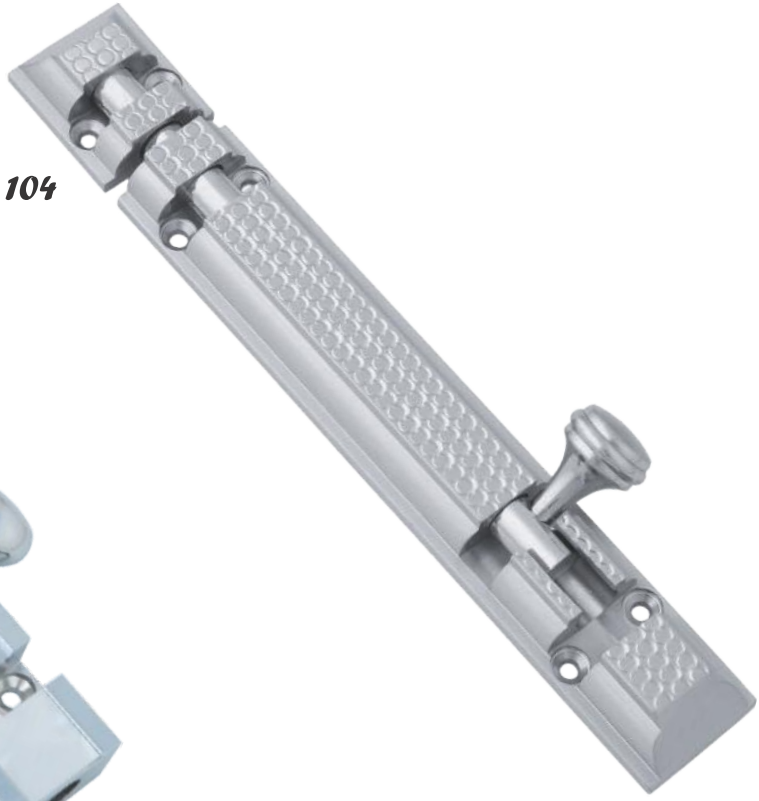

Mo. : Maharaja T.B. 105

Mo. : Maharaja T.B. 106

Mo. : Maharaja T.B. 107

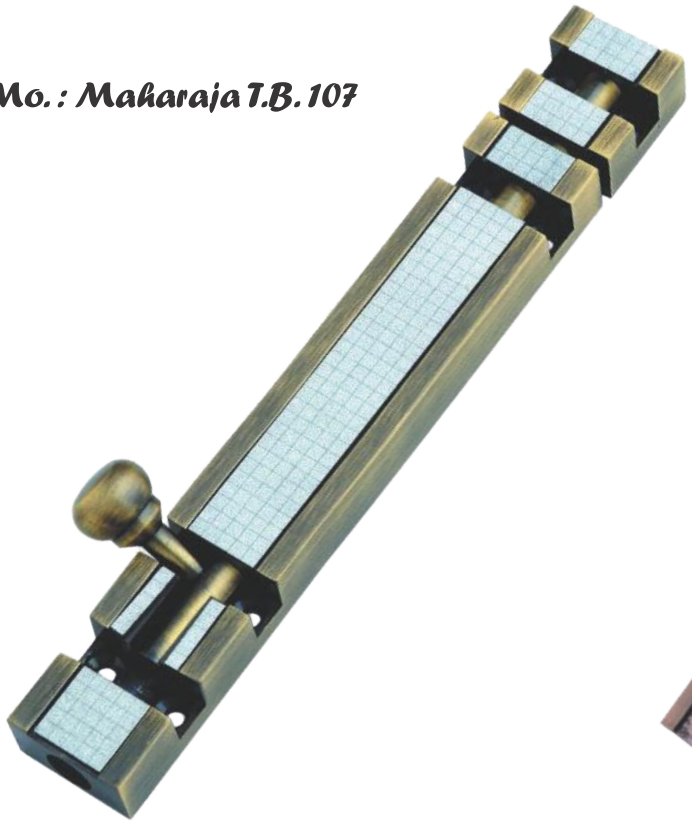

Mo. : Maharaja T.B. 108

Mo. : Square Door Stopper
Single

Mo. : Square Heavy
Door Stopper

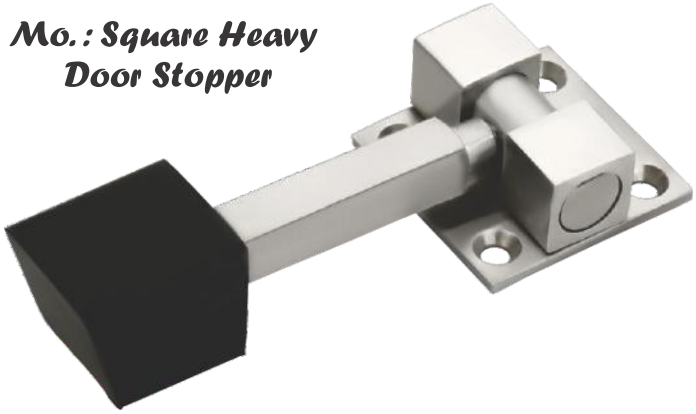

Mo. : Square Double
Door Stopper

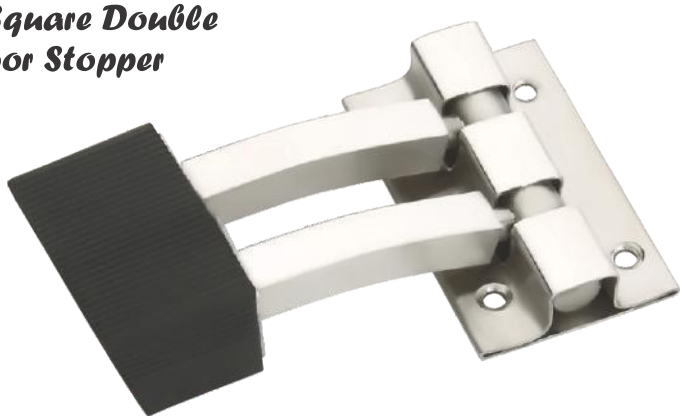

Mo. : Round 12 mm
Door Stopper
Single

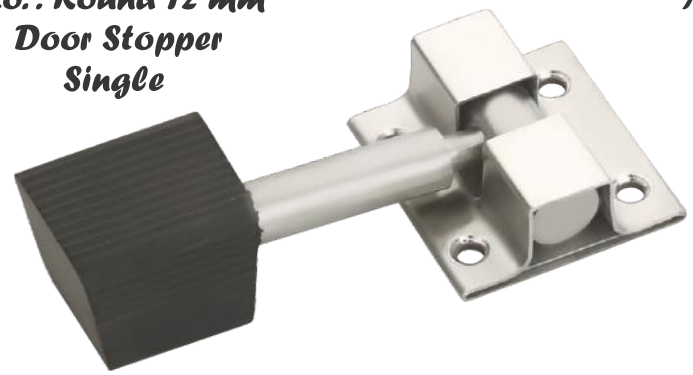

Mo. : Round 12 mm
Door Stopper
Double

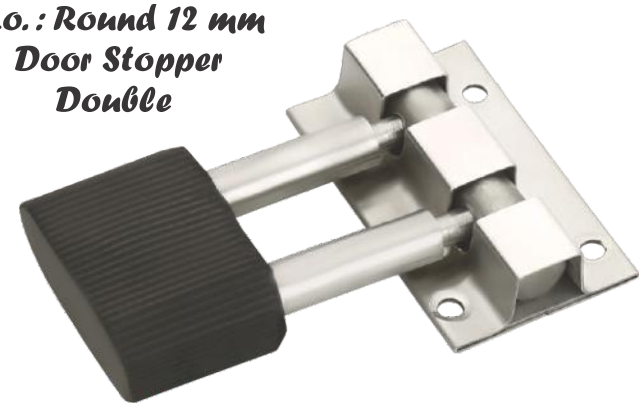

Mo. : Round 9 mm
Door Stopper
Single

Mo. : Round 9 mm
Door Stopper
Double

Mo. : Triangle Door Stopper
Single

Mo. : Triangle Door Stopper
Double

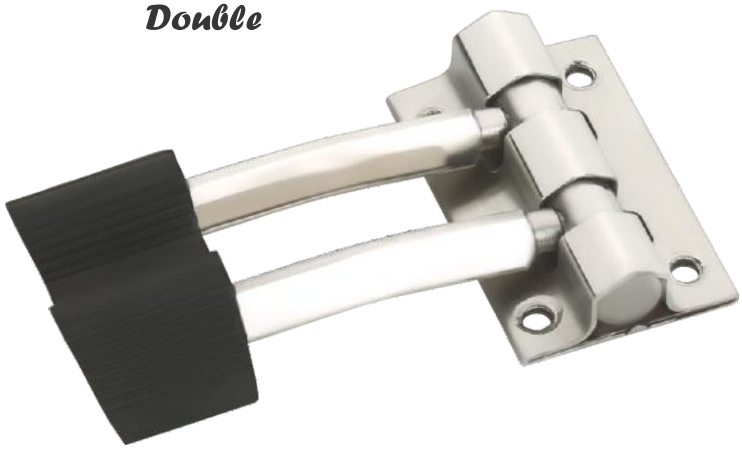

Mo. : Oval Door Stopper
Single

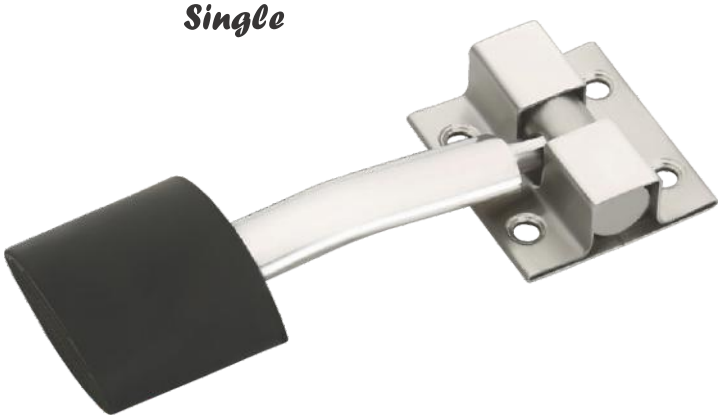

Mo. : Oval Door Stopper
Double

Mo. : Long Pipe Door Stopper
Single

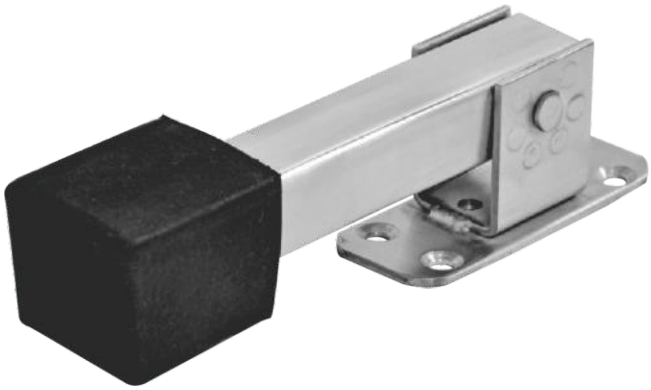

Mo. : Coucil Pipe Door Stopper
Single

Mo. : Foot Door Stopper Zink (Round)

Mo. : Foot Door Stopper SS (Square)

Mo. : Foot Door Stopper SS (Round)

Mo. : Land Door Stopper Zink (Round)

Mo. : Land Door Stopper SS (Round)

Mo. : Door Silencer (Heavy)

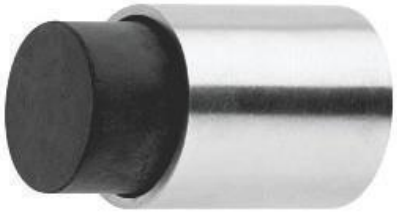

Mo. : Door Silencer (Light)

Mo. : Land Door Stopper SS (Heavy)

Mo. : Land Door Stopper SS (Light)

Mo. : Foot Door Silencer

Mo. : Mg. Zink 01

Mo. : Mg. S.S. 02

Mo. : Mg. S.S. 03

Mo. : Mg. S.S. 04

Mo. : Mg. S.S. 05

Mo. : Mg. S.S. 06

Mo. : Mg. Zink 07

Mo. : Mg. Zink 08

Mo. : Mg. S.S. 09

Mo. : Mg. S.S. 10

Mo. : Mg. S.S. 11

Mo. : Mg. Brass Push 12

Mo. : Mg. S.S. 14 (Antiq)

Mo. : Mg. S.S. 13

Mo. : Mg. S.S. 15 (Antiq)

Mo. 6
(Brown)

Mo. Vacuum
Buffer

Mo. SS Type
Square PVC

Mo. SS Type
Round PVC

Mo. 1

Mo. 2

Mo. 3

Mo. 2
Push Magnet

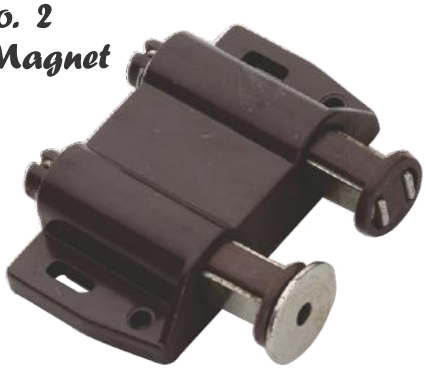

Mo. 5 (White)

Mo. 5 (Brown)

Mo. 5 (ivare)

Mo. 3 C&D Type

Mo. 3 C&D Type

Mo. 1

Mo. 2

Mo. 3

Mo. 4

* Single Bed Clamp

* Double Bed Clamp

* Triple Bed Clamp

* Door Bolt

* Fixan Window Stay

(6″, 8″, 10″, 12″...)

*3x16 (16 Gage)
*4x14 (2 mm)
*5x14 (2 mm)
*3x12 (2.5 mm)
*4x12 (2.5 mm)
*5x12 (2.5 mm)
*6x12 (2.5 mm)
*3x10 (3 mm)
*4x10 (3 mm)
*5x10 (3 mm)
*6x10 (3 mm)

* Pin Hinges
* Welded Hinges
* Bring Hinges
* L Hinges
* T Hinges

*Concil (Welding)

*Premium

*Premium Super

*Concil (Welding)

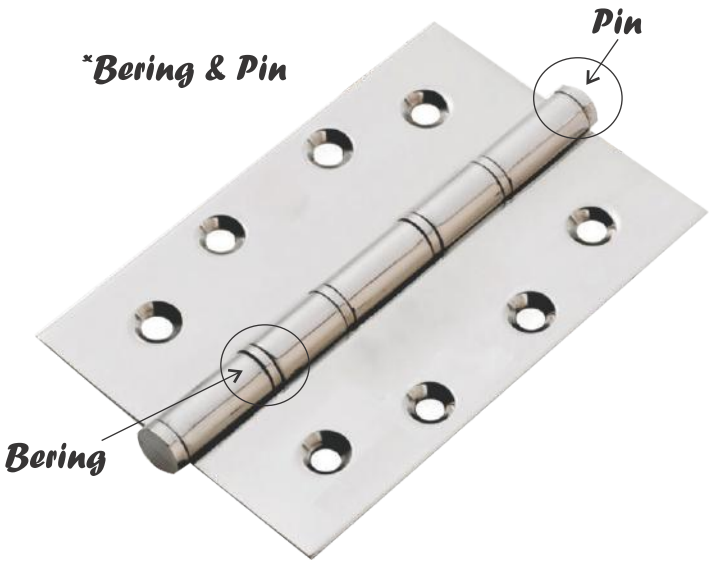
*Bering & Pin
Pin
Bering

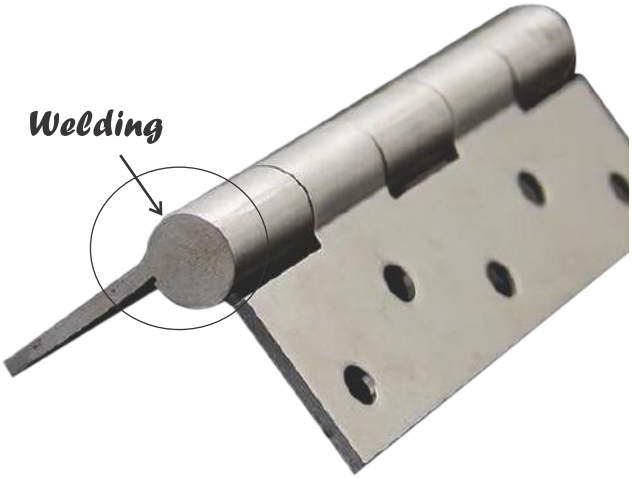
Welding

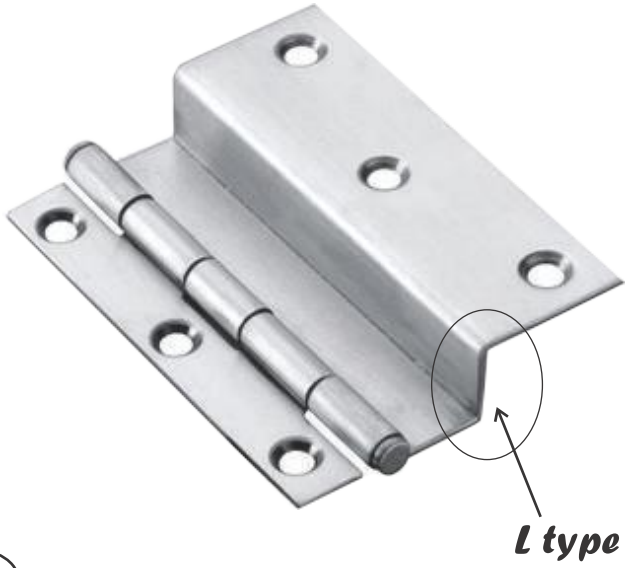
L type

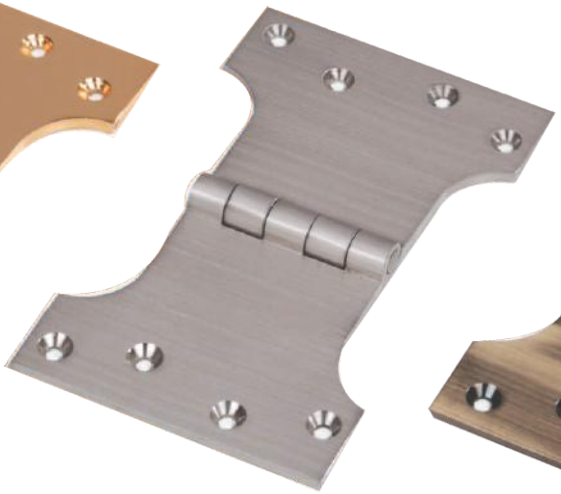

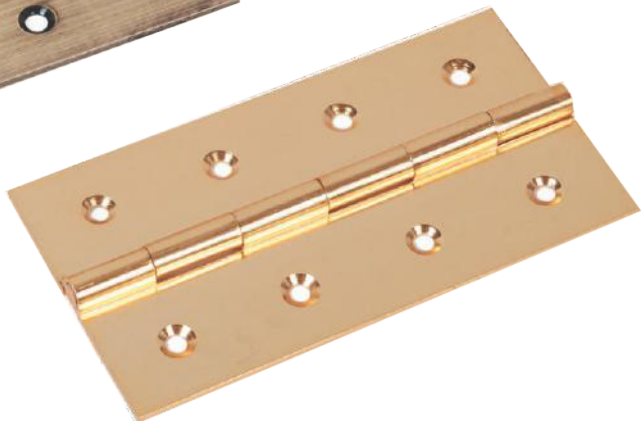

Brown

White

ivory

OFFICE

RECEPTION

SILENCE PLEASE

WASH ROOM

PUSH

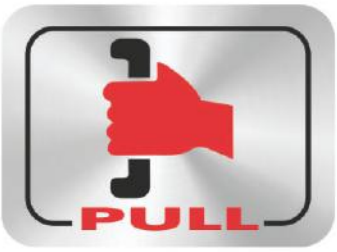
PULL

RESTAURANT

DRINKING WATER

NO ENTRY

NO PHOTOGRAPHY

KEEP YOUR SHOES OUT

NO SPITTING

NO MOBILE

NO SMOKING

DANGEROUS

EXIT

GENTS

LADIES

TOILET

TOILET

☆ *Our Dealers*

Customer Care : 99786 68177
Rajkot, Gujarat (INDIA)

w : www.kasturydoorfittings.com

e : kasturydoorfittings123@gmail.com